CONVERSION KIT MODEL 1US35k

Installation and Service Manual

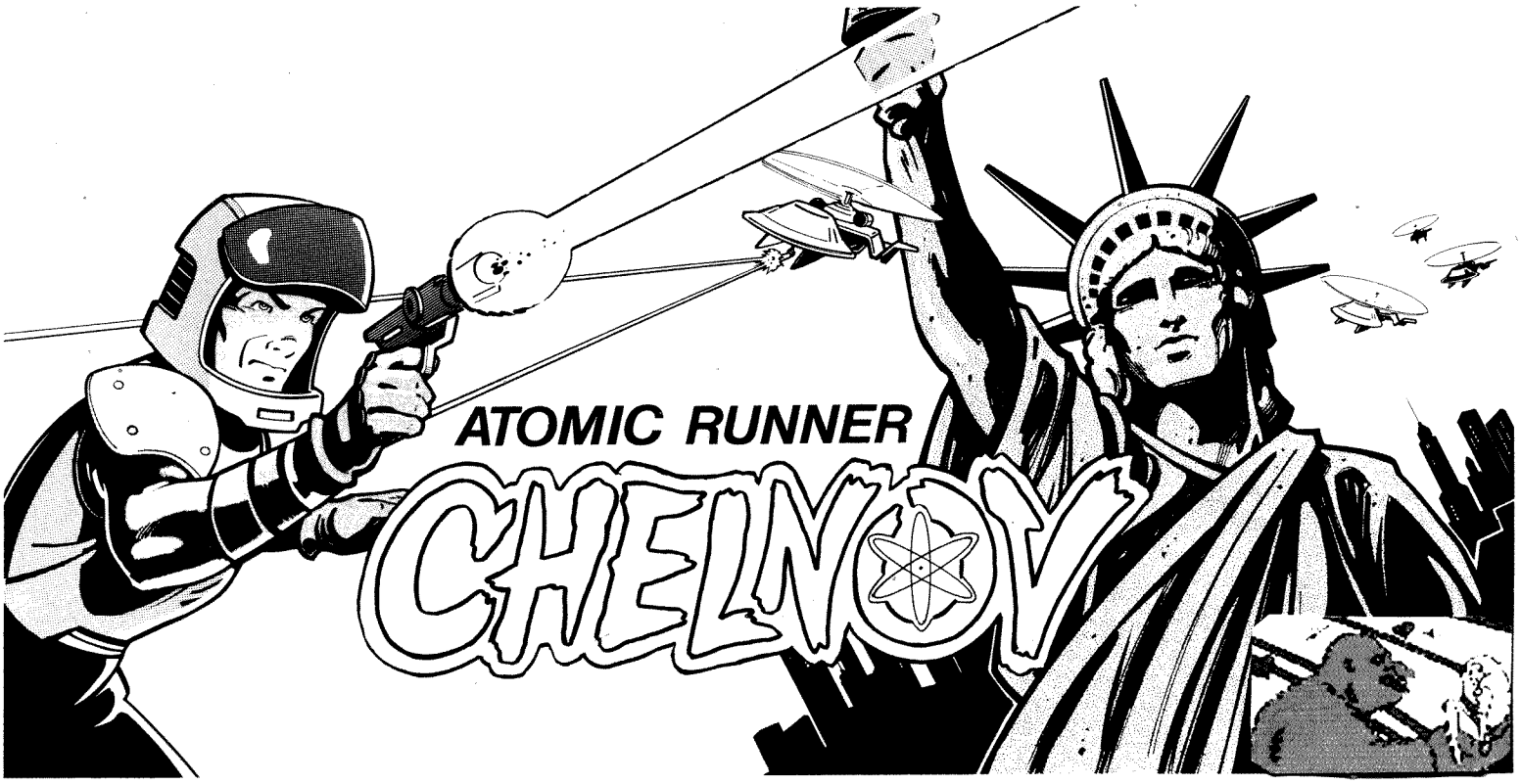

DATA EAST USA, INC.
470 Needles Drive
San Jose, California 95112
Telephone (408) 286-7080

780-0098-00
September, 1988

WARNING

This equipment generates and uses radio frequency energy and if not installed and used properly, i.e., in strict accordance with the instructions manual, may cause harmful interference to radio communications. It has been tested and found to comply with the limits for a Class A computing device persuant to Subpart J of Part 15 of FCC Rules, which are designed to provide reasonable protection against such interference when operated in a commercial environment.

Operation of this equipment in a residential area is likely to cause interference in which case the user at his own expense will be required to take whatever measures may be required to correct the interference.

WARNING

Federal law provides severe civil and criminal penalties for the unauthorized reproduction, distribution, or exhibition of copyrighted audiovisual works and video games.

The Federal Bureau of Investigation investigates allegations of criminal copyright infringement.

Atomic Runner

C H E L N O V tm

Video Game Conversion Kit

Model 1US35K

INSTALLATION AND SERVICE MANUAL

TABLE OF CONTENTS

SECTION 1 - GENERAL INFORMATION

A. Specific Requirements.....1

B. List of Materials.....1

C. Installation Instructions.....2

SECTION 2 - GAME INFORMATION

A. Game Options.....6

B. Main Harness Connector Pin Out.....7

C. PCB Edge Connector Pin Out.....8

D. Standard Connection Diagrams.....9

SECTION 3 - PCB SCHEMATIC DIAGRAMS

© 1988 DATA EAST USA, INC.

470 NEEDLES DR.
SAN JOSE, CA. 95112
(408) 286-7080

SEPTEMBER, 1988

COPYRIGHT NOTICE

C H E L N O V ™ is Copyright 1988 by DATA EAST USA, INC. Sold exclusively in the United States of America and Canada by DATA EAST USA, INC. All Rights Reserved.

WARRANTY INFORMATION

DATA EAST USA, INC. (Seller), warrants only to the original purchaser (Buyer) of its products that the items listed below are free from defects in material and workmanship under normal use and service for the period specified:

GAME LOGIC PRINTED CIRCUIT BOARD(S)	**90 DAYS**

No other parts of the Seller's products are warranted.

Warranty periods are effective from date of initial shipment from Seller to Buyer. Seller's sole liability shall be, at its option, to repair or replace products which are returned to Seller during the warranty periods specified, provided:

1. Seller is notified promptly upon discovery by buyer that stated products are defective.

2, Such products are properly packaged and then returned, freight prepaid, to a place specified by Seller.

This warranty does not apply to products damaged during shipment and/or due to improper handling, or due to improper installation or usage, or alteration. In no event shall Seller be liable for any anticipated profits, loss of profits, loss of use, accidental or consequential damages, or any other losses incurred by the customer in connection with the purchase of a DATA EAST USA, INC. product.

EXCEPT AS SPECIFICALLY PROVIDED IN A WRITTEN CONTRACT BETWEEN SELLER AND BUYER, THERE ARE NO OTHER WARRANTIES, EXPRESSED OR IMPLIED, INCLUDING ANY IMPLIED WARRANTIES OF MERCHANTABILITY OR FITNESS FOR A PARTICULAR PURPOSE.

1. GENERAL INFORMATION

A. SPECIFIC REQUIREMENTS

The C H E L N O V game is a one player (at a time) video game conversion kit. It is intended to be installed into an existing video game cabinet, and comes with all the necessary components to make the converted game look and play like a new dedicated game.

THE GAME TO BE CONVERTED MUST MEET THE FOLLOWING REQUIREMENTS

MONITOR:	Horizontal, RGB, Negative Composite Sync. Input
POWER SUPPLY:	+5vdc @ 7 Amp, +12vdc @ 1 Amp

B. LIST OF MATERIALS

QTY	DESCRIPTION	PART NUMBER
1	PCB Set, C H E L N O V	510-0141-00
1	PCB, RFI Filter Adapter, DE 0239	520-0083-00
1	Main Harness, Generic Kit (44 pin)	036-0013-02
1	Joystick Assy, 8 way	450-0003-00
2	Pushbutton, Short, Black	350-0001-00
2	Pushbutton, Short, Red	350-0001-02
1	Pushbutton, Short, Yellow	350-0001-04
2	Pushbutton, Short, Blue	350-0001-06
7	Pushbutton Holder, w/switch	185-0001-00
7	Pal Nut, Nylon	240-0001-01
1	Control Panel Overlay - Generic	800-0030-00
1	Monitor Underlay Card, Chelnov	810-0032-00
2	Decal, Side, Generic	820-0040-00
1	Plex, Marquee, Chelnov	830-0039-00
1	Plex, Clear, 23.75 X 7.6	660-0001-00
1	Manual, Chelnov Kit	780-0098-00
2	Label Set, Pushbutton ID	406-0085-00
1	Label, FCC Warning	406-0003-00

C. INSTALLATION INSTRUCTIONS

When selecting a game to convert, make sure that the Power Supply, the Monitor, and the Coin Acceptors are functional. There is nothing more frustrating than installing a conversion kit and having it not operate due to a faulty monitor or power supply. You should not expect the new logic PCB to be defective. It has been thoroughly tested and 'burned-in' at the factory.

It is mandatory that the cabinet be wired to conform with all National and Local electric codes before the conversion is attempted. The primary power input section must have adequate noise filtering on the AC line to prevent undesirable conducted radio frequency interference (RFI). "Adequate" is defined as a filter with both common mode and differential mode filtering and a minimum current capacity of 2.5 Amp.

The Federal Communications Commission (FCC), and other regulatory agencies, require that every video game be clearly labeled with the Name and Address of the Original Manufacturer, Date of Manufacture (or Serial Number), Power requirements, Suitability for indoor or outdoor use, and the Model number of the unit. DO NOT DESTROY OR DEFACE THE ORIGINAL GAME ID TAG. In addition, the FCC requires that, after conversion, the unit must be labeled with a suitable warning stating that radio frequency interference may result from use in a residential area. An acceptable label is included with this kit.

IT IS THE RESPONSIBILITY OF THE PERSON PERFORMING THE INSTALLATION TO COMPLY WITH ALL LABELING REQUIREMENTS.

TAKING IT APART

Performing a few simple tasks when preparing a game to be converted can save you much time and effort when you are installing the conversion kit.

Find the Wiring Diagram of the game to be converted. You will need to identify the required DC power supply output wires and the monitor video and sync wires. Note the color coding of these wires, or better yet, label them as to their function. This kit contains a new Main Harness, but you will need to splice it into the existing power supply and video wiring.

Remove the existing game harness parts that will not be used in this conversion. NOTE: You are modifying only the secondary (DC from power supply) and I/O (video, speaker, and controls) sections of the wiring. DO NOT MODIFY OR REMOVE THE PRIMARY AC WIRING. The original manufacturer should have designed and built it to comply with Local and National Electrical Codes and FCC regulations. It must not be altered.

C. INSTALLATION INSTRUCTIONS (cont.)

Remove the original game pcb from the cabinet. Remove all exterior decals, and repair any cabinet damage. Repaint the cabinet if necessary. Remove the monitor plex (or glass). If your plex has silkscreened art work on it, you will need to strip it off, or replace it with a new piece cut to the same size. Using the old Monitor Plex as a template, cut the Monitor Underlay card, supplied with this kit, to the same size as the old plex. NOTE: Be certain that the opening in the Underlay Card lines up with the monitor screen.

Remove the Marquee Plex from the game and use it as a template to cut the new Marquee Plex down to the correct size. Remove the control panel from the game and remove all controls and graphics from it. Drill and/or punch any required new holes for the control panel. Chelnov requires three "shoot" buttons. See the diagram below for a suggested control panel layout. If you are going to cover the control panel with clear plex (one piece provided with this kit), you should carefully cut it to fit the control panel at this time. Thoroughly clean the control panel so that the new control panel overlay will adhere to it aggressively.

PUTTING IT TOGETHER

Install the Control Panel Overlay by peeling off the paper backing and carefully laying the overly down on the panel. Smooth it out starting in the center and working your way out to the edges, removing all of the trapped air pockets. If possible, cut the edges of the overlay oversize and fold the excess under the panel. Cut out the button and joy stick holes. Install the BUTTON ID labels supplied with the kit.

FIGURE 1. Suggested Control Panel Layout

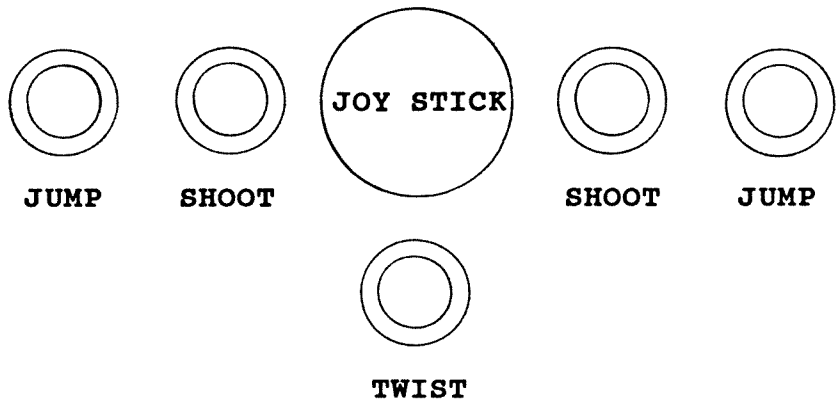

C. INSTALLATION INSTRUCTIONS (cont.)

You may wish to cover the control panel overlay and button ID labels with clear plex at this time. Install the new buttons and joy stick at this time. Refer to Figure 1 on the previous page for recommended control layout.

GAME PCB: Mount the Game PCB to a convenient wall of the cabinet, using the mounting feet and hardware supplied with the pcb.

MAIN HARNESS: The main harness provided with this kit has a 44 pin connector. Refer to Figure 2, on page 7 for wire color and function information. It must mate with the RFI Filter/Adapter. The Game pcb has a 56 pin JAMMA connector. Refer to Figure 3, on page 8 for information pertaining to signals and function as they are found on the game pcb edge connector.

POWER SUPPLY WIRING: Plug the RFI Filter/Adapter (DE0239) onto the game pcb. This Filter/Adapter is mandatory, as undesirable Radio Frequency Interference will be generated if it is not used. Plug the main harness edge connector onto the RFI Filter/Adapter. Separate the DC power wires and route them through the cabinet to the Power Supply. Try to keep the length of these wires to a minimum for best results. **NOTE: Use a minimum of two (2) wires EACH for the +5 volts and the Ground lines between the power supply and the pcb.** Terminate these wires at the power supply as required.

NOTE: IMPROPER WIRING WILL DAMAGE THE PCB SET AND VOID THE WARRANTY!

PLAYER CONTROL WIRING: Route the push button and joy stick wires up to their proper destinations, cut to length, and terminate as required.

MONITOR WIRING: The game outputs are Positive for the Red, Green and Blue signals, and Negative Composite Sync. If your monitor has separate Horizontal and Vertical sync inputs, hook the Composite sync to the negative Horizontal input. This method will work on most monitors. However, some model Electrohome's require that the Composite sync signal be hooked up to both the negative Horizontal and Vertical inputs. Contact your distributor for more information if you are uncertain as to how to hook up the monitor wires.

COIN DOOR: The coin counter(s) may be the 12 volt or the 6 volt type, as the game pcb utilizes an open collector drive circuit. Hook one coin counter wire to the required, positive voltage and the other wire to the coin counter signal wire from the main harness edge connector. Refer to the standard connection diagrams on page 9.

C. INSTALLATION INSTRUCTIONS (cont.)

GRAPHICS: The monitor underlay card is pre-printed with game instructions. Install the underlay card under a clean, clear plex or glass. Check any marquee lamps for proper operation. Replace any burned out lamps. Install the CHELNOV marquee on the game. Install the two DATA EAST side decals. **IMPORTANT: Install the "FCC Warning" label to the upper rear of the cabinet.**

THE BIG TEST!

Remove the RFI Filter/Adapter from the game pcb, but leave the main harness connected to the Filter/Adapter. Apply power. Measure the +5 volts at the edge connector of the Filter/Adapter (at the point where it would connect to the game pcb). Adjust to +5.15 VDC using a Digital volt meter. Measure the +12 volts and the -5 volts (if any) to ensure that they are connected properly and are on the correct terminals. TURN THE POWER OFF! Now reconnect the RFI Filter/Adapter to the game pcb, and apply power once again. The attract mode video should appear on the screen. Adjust the picture size and colors on the monitor to get the optimum appearance. Adjust the Sync and Hold controls on the monitor for a stable picture. Coin it up and give it a try! Test all the controls and check the sound for proper operation.

CONGRATULATIONS! You have successfully installed your DATA EAST conversion kit. We hope that it gives you may years of successful operation.

2. GAME INFORMATION

A. OPERATOR SELECTABLE OPTIONS

The CHELNOV game allows for operator adjustable pricing, bonus lives, difficulty, etc. These are accessed by the two 8 position dipswitches located on the main logic pcb. Tables 1 and 2 outline the available options.

TABLE 1 - DIPSWITCH 1

		1	2	3	4	5	6	7	8
Game Charge (right) COIN 1	1 Coin = 1 Credit:	OFF	OFF			ALWAYS			
	1 Coin = 2 Credit:	ON	OFF						
	1 Coin = 3 Credit:	OFF	ON						
	2 Coin = 1 Credit:	ON	ON						
Game Charge (left) COIN 2	1 Coin = 1 Credit:			OFF	OFF				
	1 Coin = 2 Credit:			ON	OFF				
	1 Coin = 3 Credit:			OFF	ON				
	2 Coin = 1 Credit:			ON	ON				
Attract mode sound?	YES:						OFF		
	NO:					OFF	ON		
Flip Screen?	YES:							ON	
	NO:							OFF	
	Cocktail Table:								OFF
	Upright game:								ON

TABLE 2 - DIPSWITCH 2

		1	2	3	4	5	6	7	8
Number of lives	3:	OFF	OFF				ALWAYS		ALWAYS
	5:	ON	OFF						
	1:	OFF	ON						
	infinite:	ON	ON						
Game Difficulty	Normal:			OFF	OFF				
	Easy:			ON	OFF				
	Hard:			OFF	ON				
	Hardest:			ON	ON				
Continue Mode ?	Yes:					OFF	OFF		OFF
	No:					ON			
FREEZE FRAME?	Off:							OFF	
	On:							ON	

B. MAIN HARNESS CONNECTOR PIN-OUT

REMEMBER: In order to prevent undesirable radio frequency interference, the RFI Filter/Adapter must be used. Do not attempt to buypass it! Listed below are the game signals as they appear on the Main Harness (44 pin) connector which mates with the RFI Filter/Adapter.

FIGURE 2. MAIN HARNESS 036-0013-02

EDGE CONNECTOR WIRING

COMPONENT SIDE			SOLDER SIDE		
color	pin	signal	color	pin	signal
gn	1	1P Down		A	2P Down
yl	2	1P Up		B	2P Up
or	3	1P Left		C	2P Left
rd	4	1P Right		D	2P Right
pk	5	1P Shoot 3		E	
	6			F	
	7			H	
lt bu	8	Service		J	
bu	9	1P Shoot 1		K	2P Shoot 1
pu	10	1P Shoot 2		L	2P Shoot 2
bn	11	1P Game Select	rd/wh	M	2P Game Select
gn	12	Coin 1	rd	N	Coin 2
pu	13	Coin Count 1	sl	P	Coin Count 2
bu/wh	14	TV Blue	gn/wh	R	TV Green
wh/bk	15	Sync	rd/wh	S	TV Red
	16			T	
wh	17	Speaker (+)	bk/wh	U	Speaker (-)
or	18	+ 12 Volts		V	
rd	19	+ 5 Volts	rd	W	+ 5 Volts
rd	20	+ 5 Volts	rd	X	+ 5 Volts
bk	21	TV Ground	bk	Y	Ground
bk	22	Ground	bk	Z	Ground

C. PCB EDGE CONNECTOR PIN-OUT

For your reference, these are the game signals as they appear on the edge connector of the game pcb.

SOLDER SIDE	PIN #		PARTS SIDE
GND	A	1	GND
GND	B	2	GND
+5V	C	3	+5V
+5V	D	4	+5V
	E	5	
+12V	F	6	+12V
MISTAKEN INPUT PREVENTION	H	7	MISTAKEN INPUT PREVENTION
COIN COUNTER 2	J	8	COIN COUNTER 1
	K	9	
SPEAKER(-)	L	10	SPEAKER (+)
	M	11	
VIDEO GREEN	N	12	VIDEO RED
VIDEO SYNC	P	13	VIDEO BLUE
SERVICE SWITCH	R	14	VIDEO GND
	S	15	
COIN SWITCH 2	T	16	COIN SWITCH 1
START SWITCH 2	U	17	START SWITCH 1
2P CONTROL 1 UP	V	18	1P CONTROL 1 UP
2P CONTROL 2 DOWN	W	19	1P CONTROL 2 DOWN
2P CONTROL 3 LEFT	X	20	1P CONTROL 3 LEFT
2P CONTROL 4 RIGHT	Y	21	1P CONTROL 4 RIGHT
2P CONTROL 5 PUSH 1	Z	22	1P CONTROL 5 PUSH 1
2P CONTROL 6 PUSH 2	a	23	1P CONTROL 6 PUSH 2
2P CONTROL 7 PUSH 3	b	24	1P CONTROL 7 PUSH 3
	c	25	
	d	26	
GND	e	27	GND
GND	f	28	GND

D. STANDARD CONNECTION DIAGRAMS

COIN COUNTERS & COIN SWITCHES

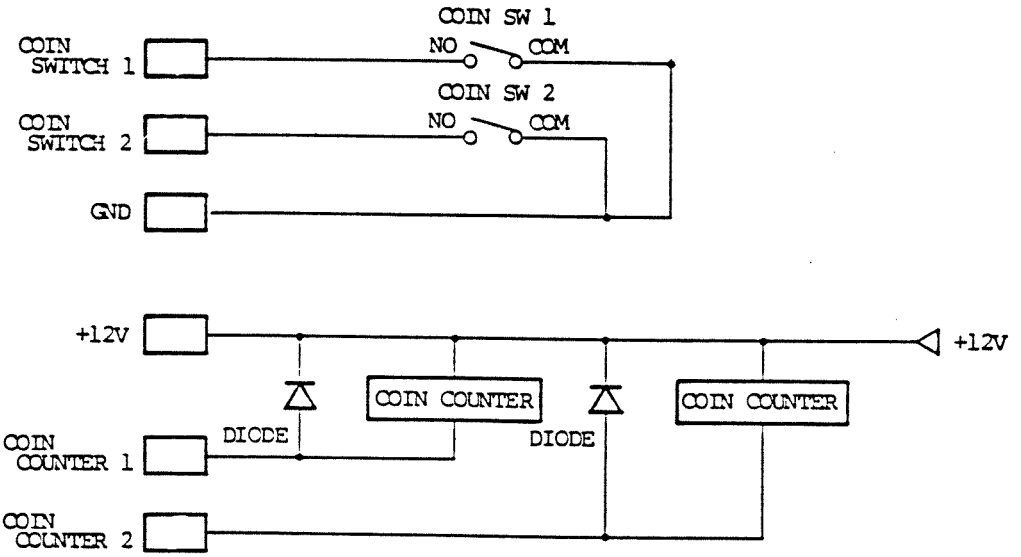

COIN COUNTER/COIN SWITCH CIRCUIT

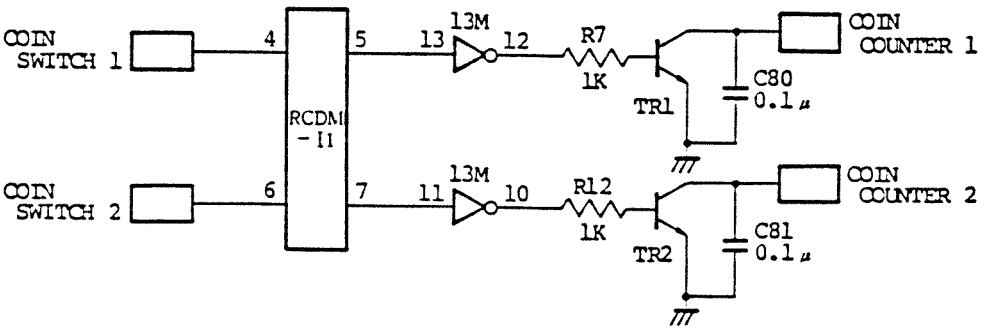

3. PCB SCHEMATICS

WARNING:

Due to the Multi-layer printed circuit boards used on this game, DATA EAST recommends service be performed only by qualified technicians with the equipment required for the servicing of multi-layer printed circuit boards.

Attempts to service multi-layer printed circuit boards using conventional de-soldering equipment may result in permanent damage to the printed traces and void your warranty.

```
*********************************
* REPLACEMENT PARTS AND SERVICE *
*********************************
```

To obtain replacement parts or technicl assistance, contact the DATA EAST distributor in your area. If you require referral or further technical assistance, contact DATA EAST'S Service Department during the hours of 8:00 AM to 5:00 PM, Pacific time, Monday through Friday, at (408) 286-7080.

"VOICE MAIL"

During off hours, you may leave a "voice mail" message on (408) 286-7074 Extension 236. It will be retrieved by the Service Department on the next business day. If you wish, you may also use this feature during the normal work day.

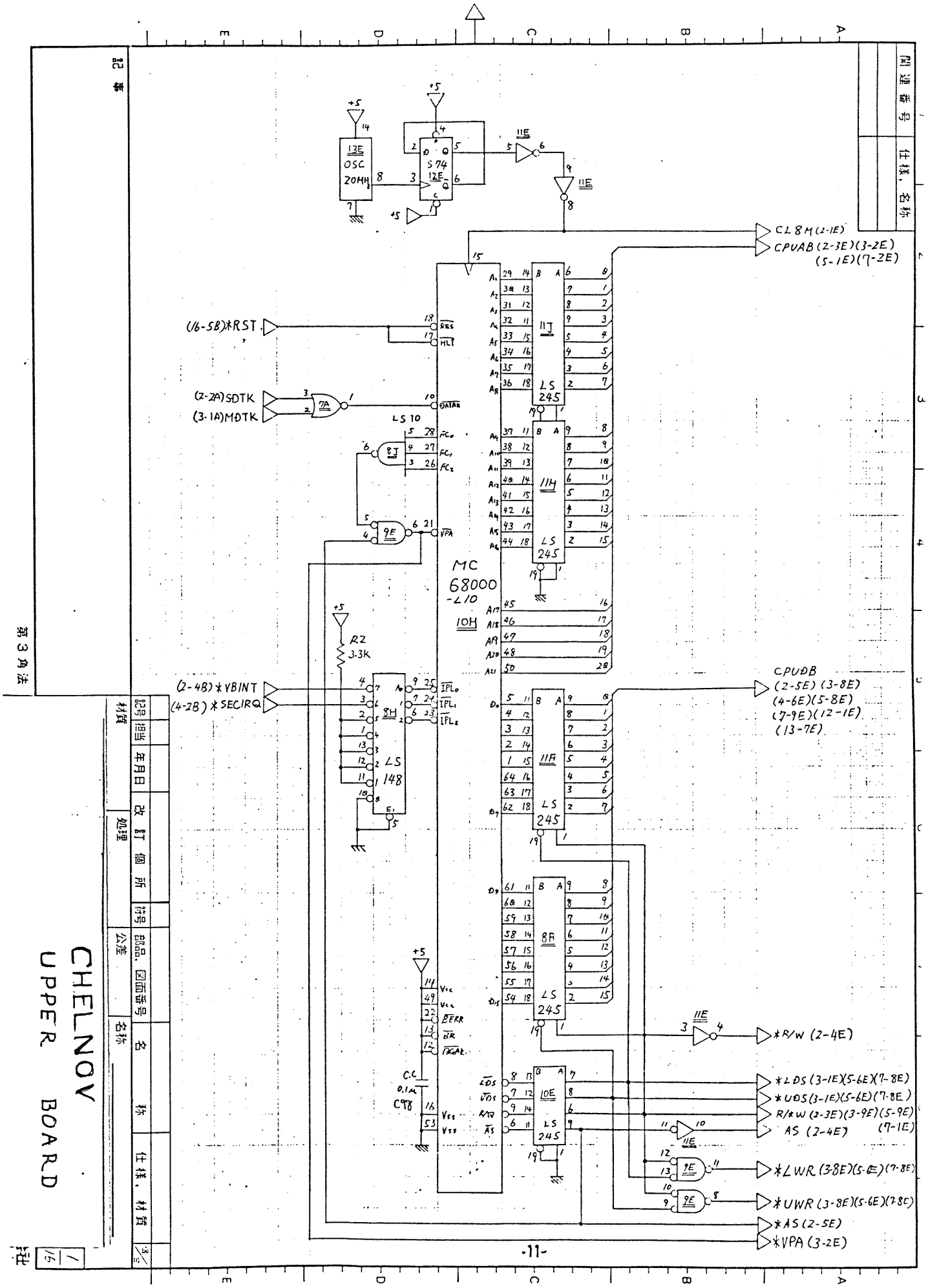
CHELNOV
UPPER BOARD
MC 68000 -L10
10H
LS 245
LS 148
LS 10
OSC 20MHz
S74
CL8M (2-1E)
CPUAB (2-3E)(3-2E) (5-1E)(7-2E)
(16-5B)*RST
(2-2A)SDTK
(3-1A)MDTK
CPUDB (2-5E)(3-8E) (4-6E)(5-8E) (7-9E)(12-1E) (13-7E)
(2-4B)*VBINT
(4-2B)*SECIRQ
*R/W (2-4E)
*LDS (3-1E)(5-6E)(7-8E)
*UDS (3-1E)(5-6E)(7-8E)
R/*W (2-3E)(3-9E)(5-9E) (7-1E)
AS (2-4E)
*LWR (3-8E)(5-6E)(7-8E)
*UWR (3-8E)(5-6E)(7-8E)
*AS (2-5E)
*VPA (3-2E)
第3角法
記事
関連番号
仕様，名称
材質
処理
公差
名称
仕様，材質
記号
担当
年月日
改訂個所
符号
部品，図面番号
1/16

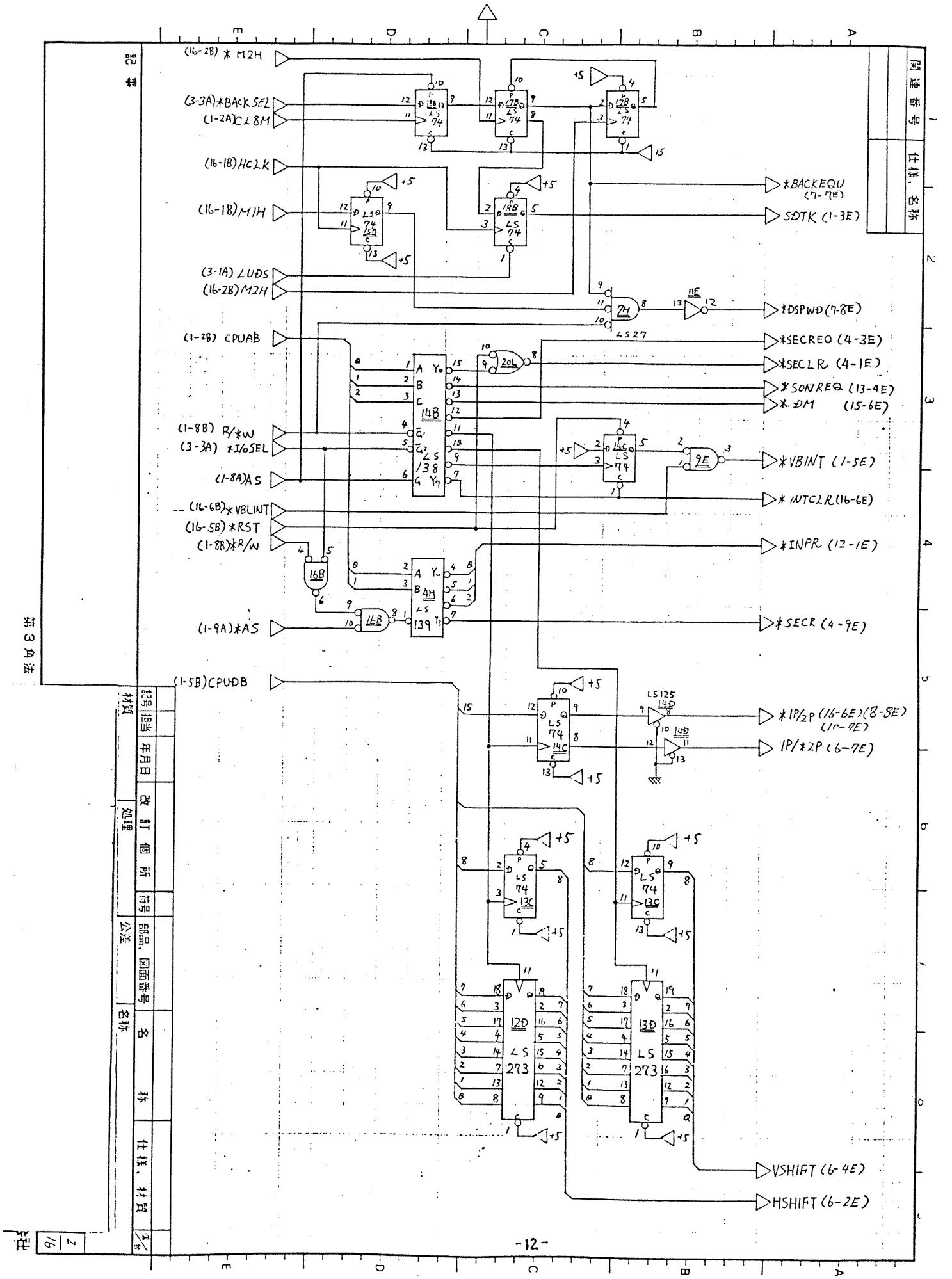
(16-2B) * M2H
(3-3A) *BACK SEL
(1-2A) CL8M
(16-1B) HCLK
(16-1B) M1H
(3-1A) LUDS
(16-2B) M2H
(1-2B) CPUAB
(1-8B) R/*W
(3-3A) *I/OSEL
(1-8A) AS
(16-6B) *VBLINT
(16-5B) *RST
(1-8B) *R/W
(1-9A) *AS
(1-5B) CPUDB
*BACKEQU (7-7E)
SDTK (1-3E)
*DSPWD (7-8E)
*SECREQ (4-3E)
*SECLR (4-1E)
*SONREQ (13-4E)
*DM (15-6E)
*VBINT (1-5E)
*INTCLR (16-6E)
*INPR (12-1E)
*SECR (4-9E)
*IP/2P (16-6E)(8-8E) (1P-7E)
IP/*2P (6-7E)
VSHIFT (6-4E)
HSHIFT (6-2E)
LS74
LS138
LS139
LS273
LS125
LS27
LS20
LS08
LS32
LS86
LS04
LS09
LS125
+5

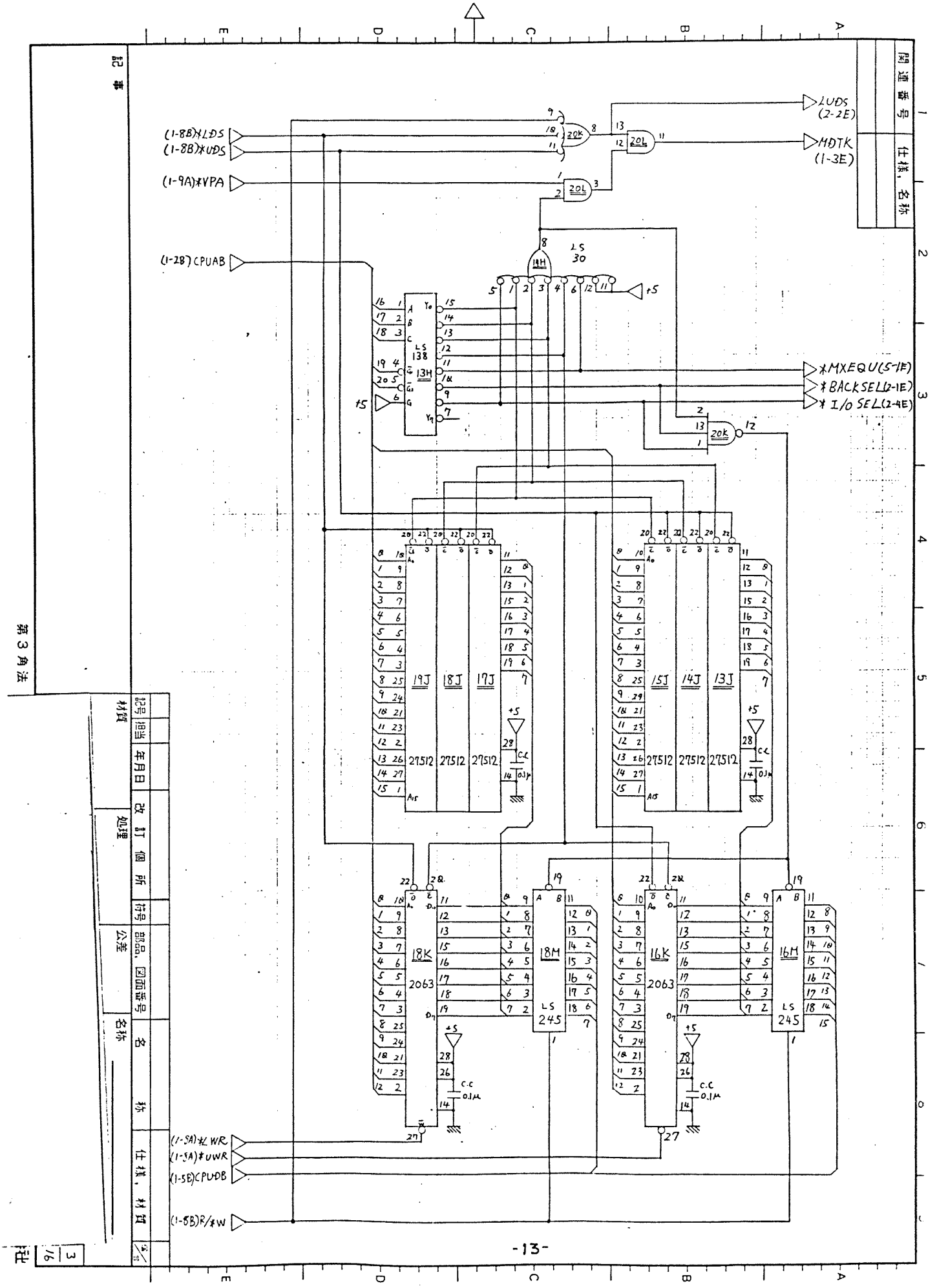
(1-8B)*LDS
(1-8B)*UDS
(1-9A)*VPA
(1-2B) CPUAB
LUDS (2-2E)
MDTK (1-3E)
20K
20L
LS 30
18H
LS 138
13H
+5
*MXEQU(5-1E)
*BACKSEL(2-1E)
* I/O SEL(2-4E)
19J
18J
17J
15J
14J
13J
27512
18K
16K
2063
18M
16M
LS 245
C.C 0.1μ
(1-5A)*LWR
(1-5A)*UWR
(1-5B)CPUDB
(1-5B)R/*W
記事
第3角法
材質
処理
公差
名称
記号 担当
年月日
改訂個所
符号
部品、図面番号
名称
仕様、材質
数量
関連番号
仕様、名称
3/16

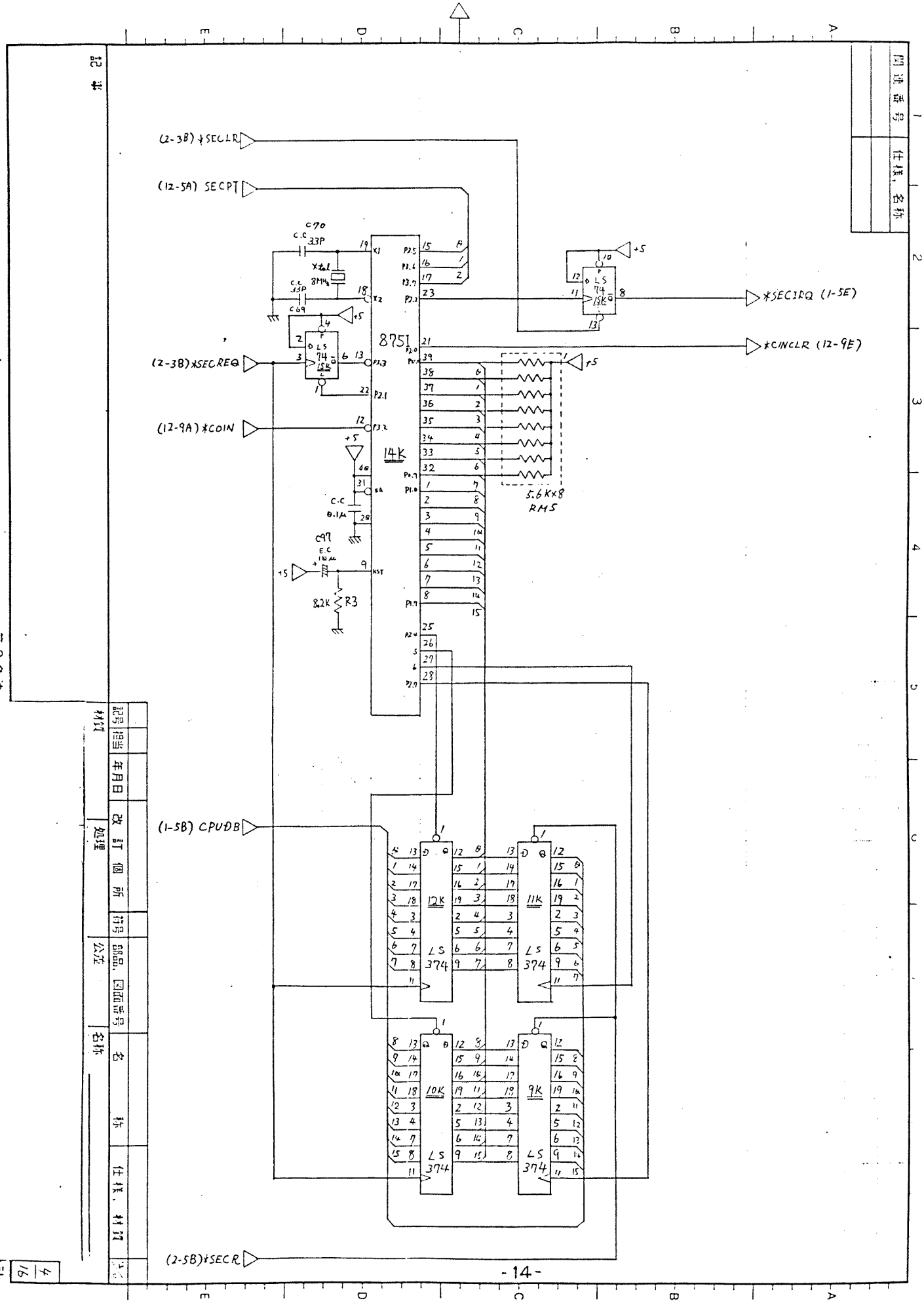
(2-3B) *SECLR
(12-5A) SECPT
C70
C.C 33P
8MHz
C.C 33P
C69
+5
74 LS 15K
(2-3B) *SECREQ
(12-9A) *COIN
8751
14K
C.C 0.1μ
C97
E.C 10μ
8.2K R3
5.6K×8 RMS
*SECIRQ (1-5E)
*CINCLR (12-9E)
(1-5B) CPUDB
12K
11K
10K
9K
LS 374
(2-5B) *SECR
記事
第3角法
図連番号
仕様，名称
記号 担当 年月日 改訂個所 符号 部品，図面番号 名称 仕様，材質
材質
処理
公差
4/16
-14-

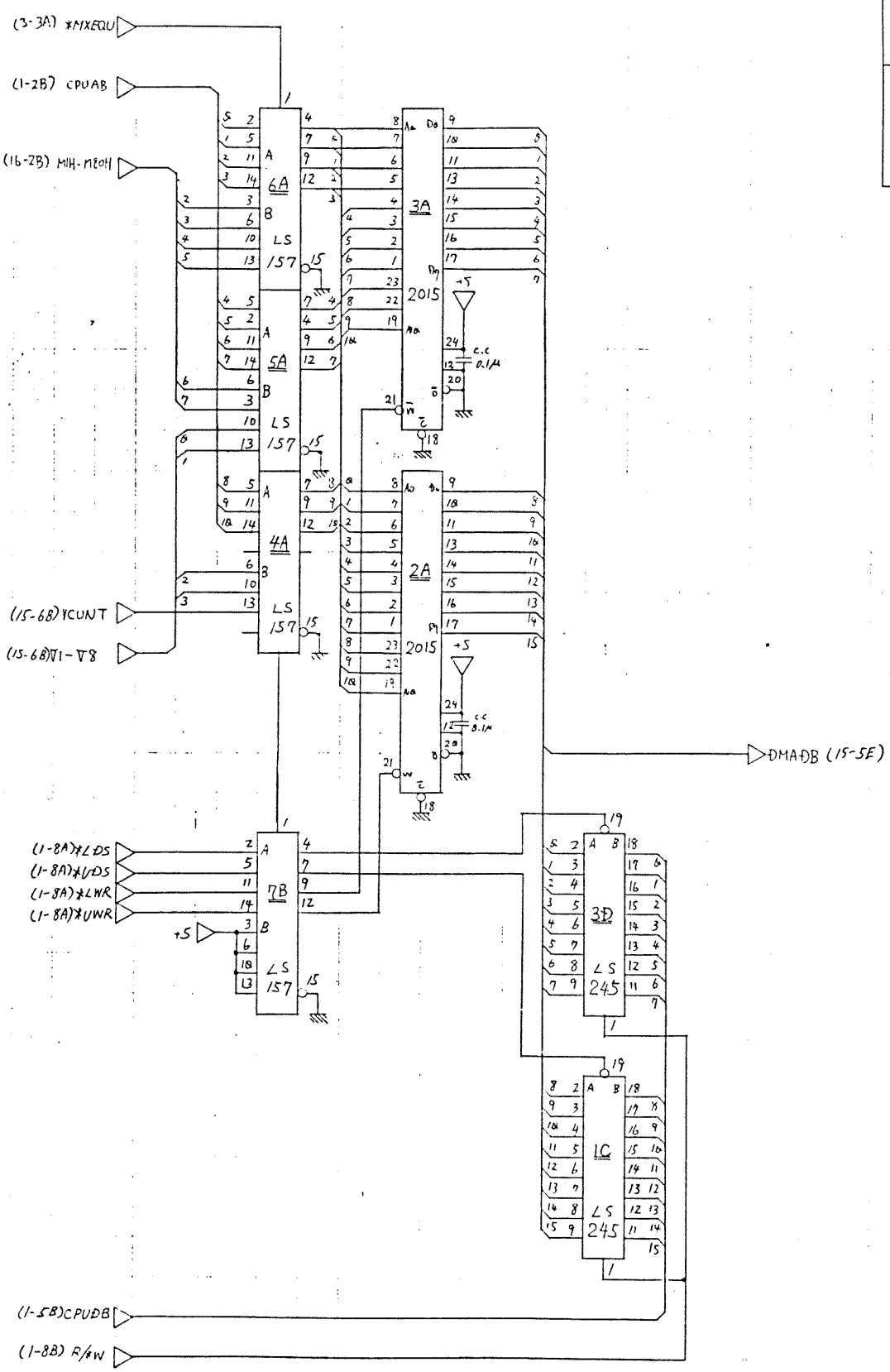
(3-3A) *MXEQU
(1-2B) CPUAB
(16-2B) MIH-MEOH
(15-6B) YCUNT
(15-6B) V1-V8
(1-8A) *LDS
(1-8A) *UDS
(1-8A) *LWR
(1-8A) *UWR
(1-5B) CPUDB
(1-8B) R/*W
DMADB (15-5E)
6A
5A
4A
7B
3A
2A
3D
1C
LS 157
2015
LS 245
+5
C.C 0.1μ

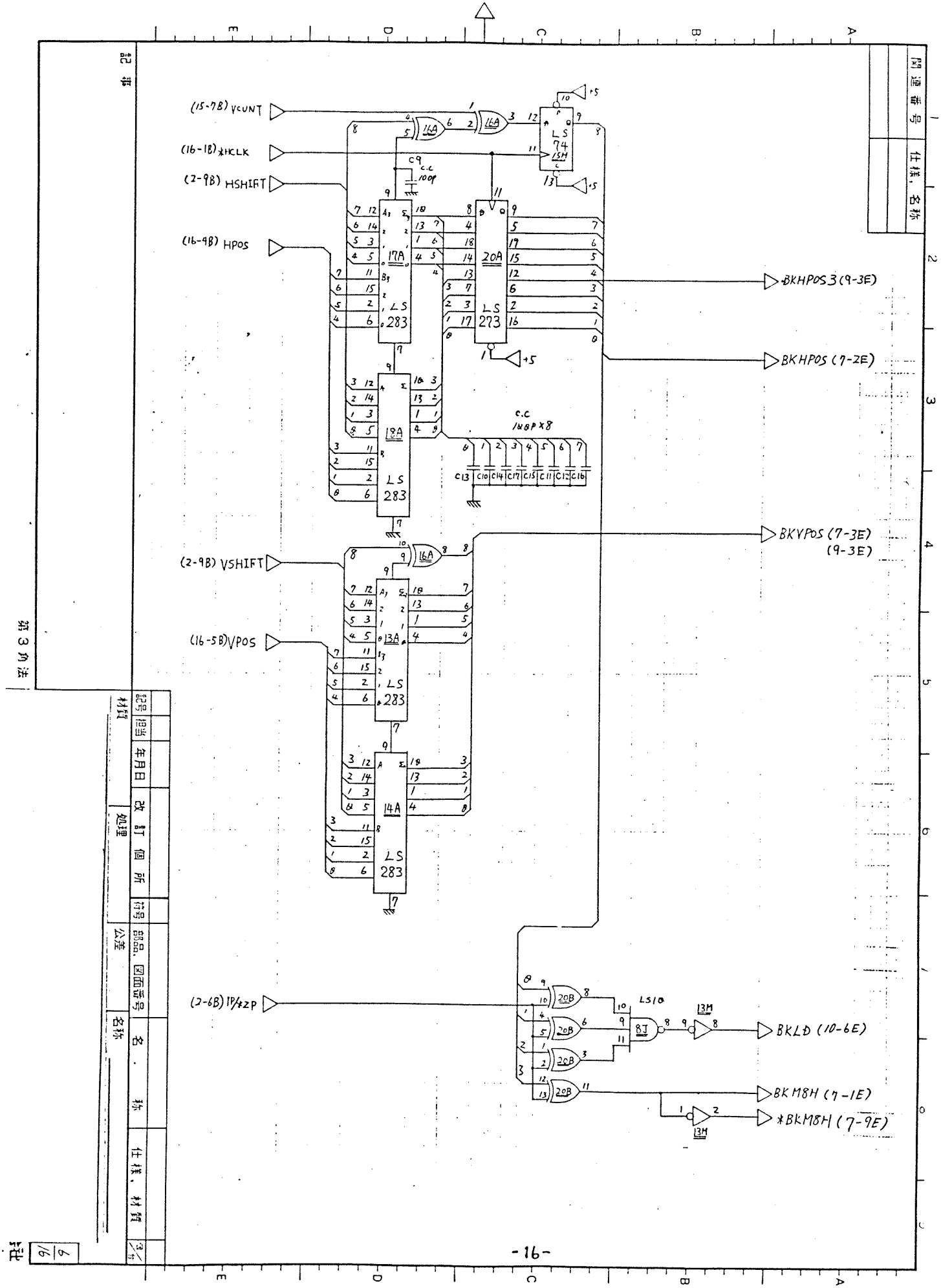
(15-7B) VCUNT
(16-1B) *HCLK
(2-9B) HSHIFT
(16-9B) HPOS
(2-9B) VSHIFT
(16-5B) VPOS
(2-6B) 1P/4ZP
BKHPOS3 (9-3E)
BKHPOS (7-2E)
BKVPOS (7-3E)
(9-3E)
BKLD (10-6E)
BKM8H (7-1E)
*BKM8H (7-9E)
LS 283
LS 273
LS 74
LS10
C.C 100P
C.C 1/4BP×8
+5

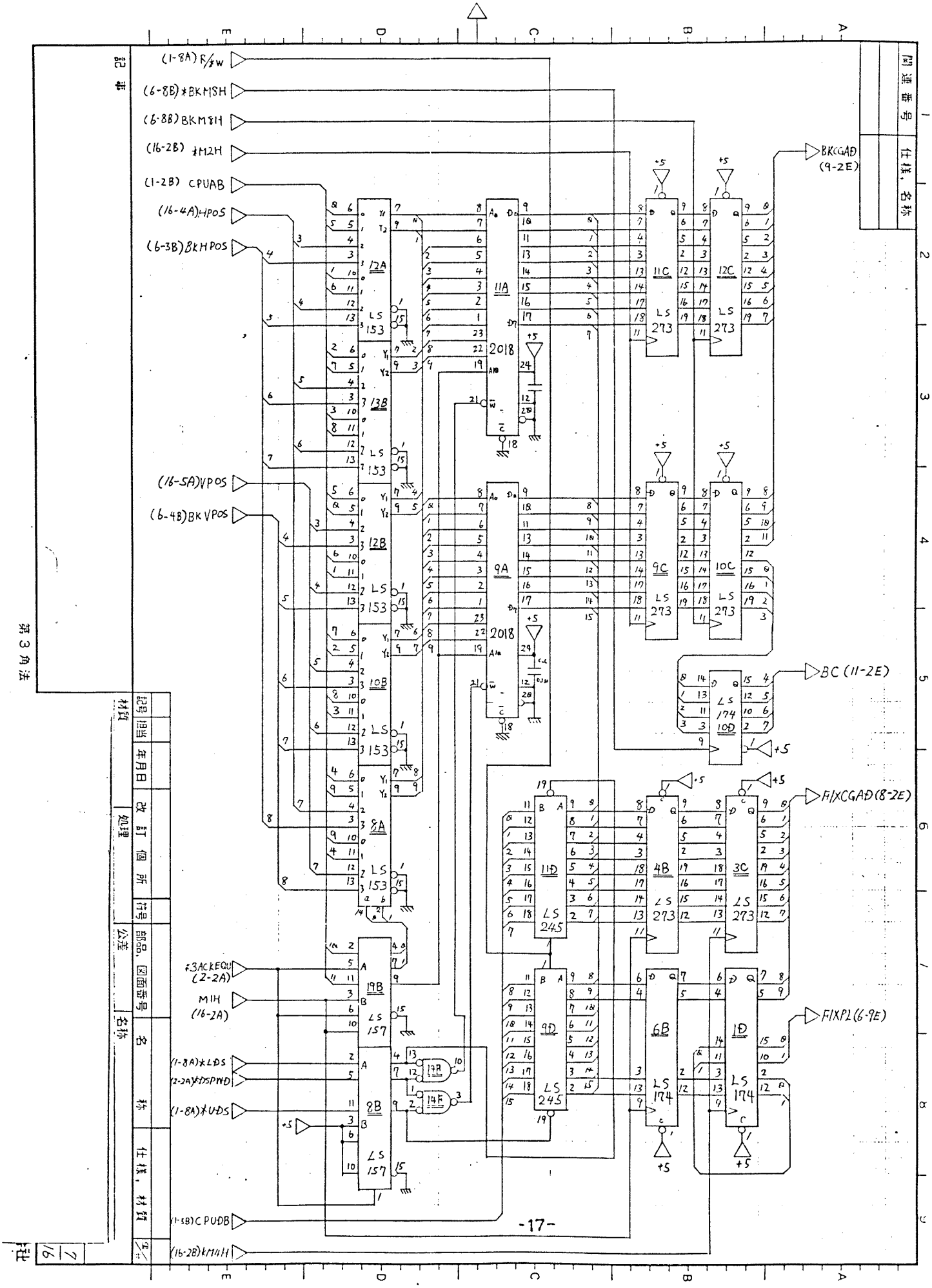
(1-8A) R/*W
(6-8B) *BKMISH
(6-8B) BKMISH
(16-2B) *M2H
(1-2B) CPUAB
(16-4A) HPOS
(6-3B) BKHPOS
(16-5A) VPOS
(6-4B) BKVPOS
*3ACKEQU (2-2A)
MIH (16-2A)
(1-8A) *LDS
(2-2A) *DSPWD
(1-8A) *UDS
(1-5B) CPUDB
(16-2B) *M4H
BKCGAD (9-2E)
BC (11-2E)
FIXCGAD (8-2E)
FIXP1 (6-9E)
12A LS 153
13B LS 153
12B LS 153
10B LS 153
8A LS 153
19B LS 157
8B LS 157
14A
14F
11A 2018
9A 2018
11C LS 273
12C LS 273
9C LS 273
10C LS 273
10D LS 174
11D LS 245
9D LS 245
4B LS 273
3C LS 273
6B LS 174
1D LS 174
+5
-17-
記事
第3角法
関連番号
仕様，名称
記号
担当
年月日
改訂個所
処理
符号
部品，図面番号
公差
名称
仕様，材質
材質
7/16

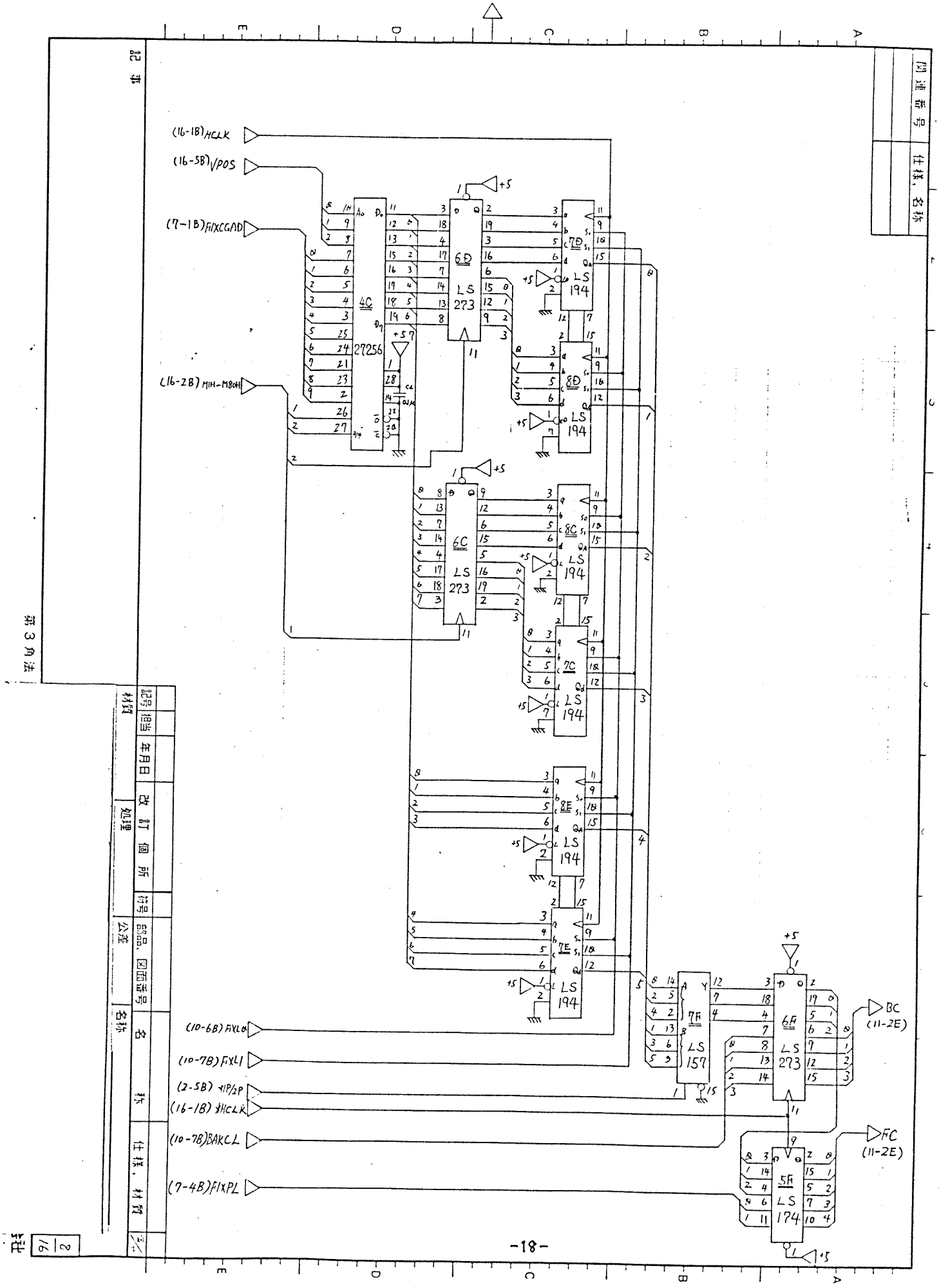
(16-1B)HCLK
(16-5B)VPOS
(7-1B)FIXCGAD
(16-2B)M1H-M8OH
(10-6B)FIXL0
(10-7B)FIXL1
(2-5B)*1P/2P
(16-1B)*1HCLK
(10-7B)BAKCL
(7-4B)FIXPL
4C
27256
6D
LS 273
7D
8D
LS 194
6C
7C
8C
8E
7E
7F
LS 157
6F
5F
LS 174
BC
(11-2E)
FC
(11-2E)
+5
関連番号
仕様，名称
記事
第3角法
材質
処理
公差
名称
仕様，材質
記号
担当
年月日
改訂個所
符号
部品，図面番号
名称
-18-

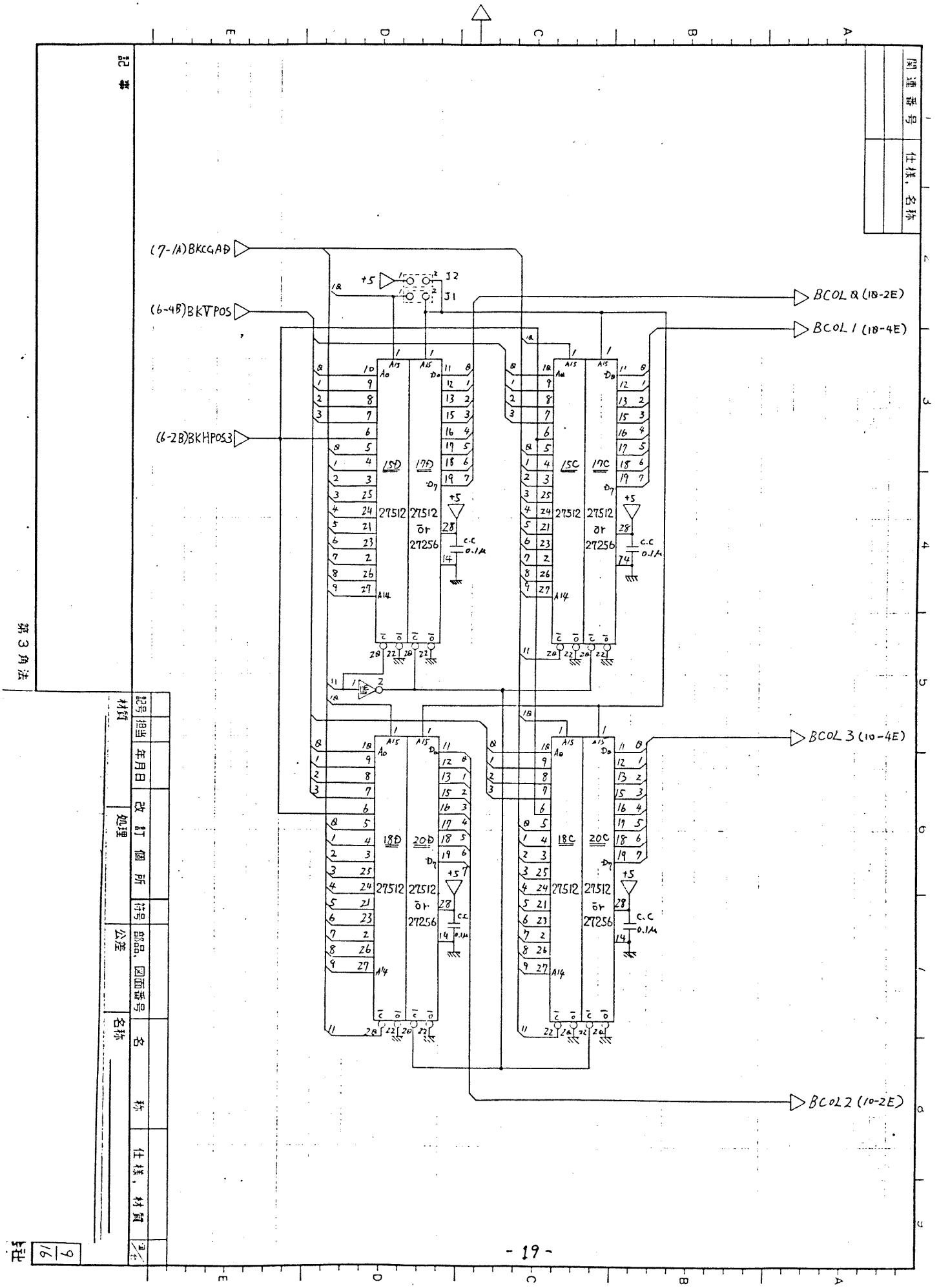
(7-1A)BKCGAD
(6-4B)BKVPOS
(6-2B)BKHPOS3
BCOL 0 (18-2E)
BCOL 1 (18-4E)
BCOL 3 (10-4E)
BCOL 2 (10-2E)
+5
J2
J1
15D
17D
15C
17C
18D
20D
18C
20C
27512
27512
or
27256
C.C
0.1μ
A14
A15
D7
関連番号
仕様，名称
記事
第3角法
材質
処理
公差
記号 担当
年月日
改訂個所
符号
部品，図面番号
名称
仕様，材質
9/16
- 19 -

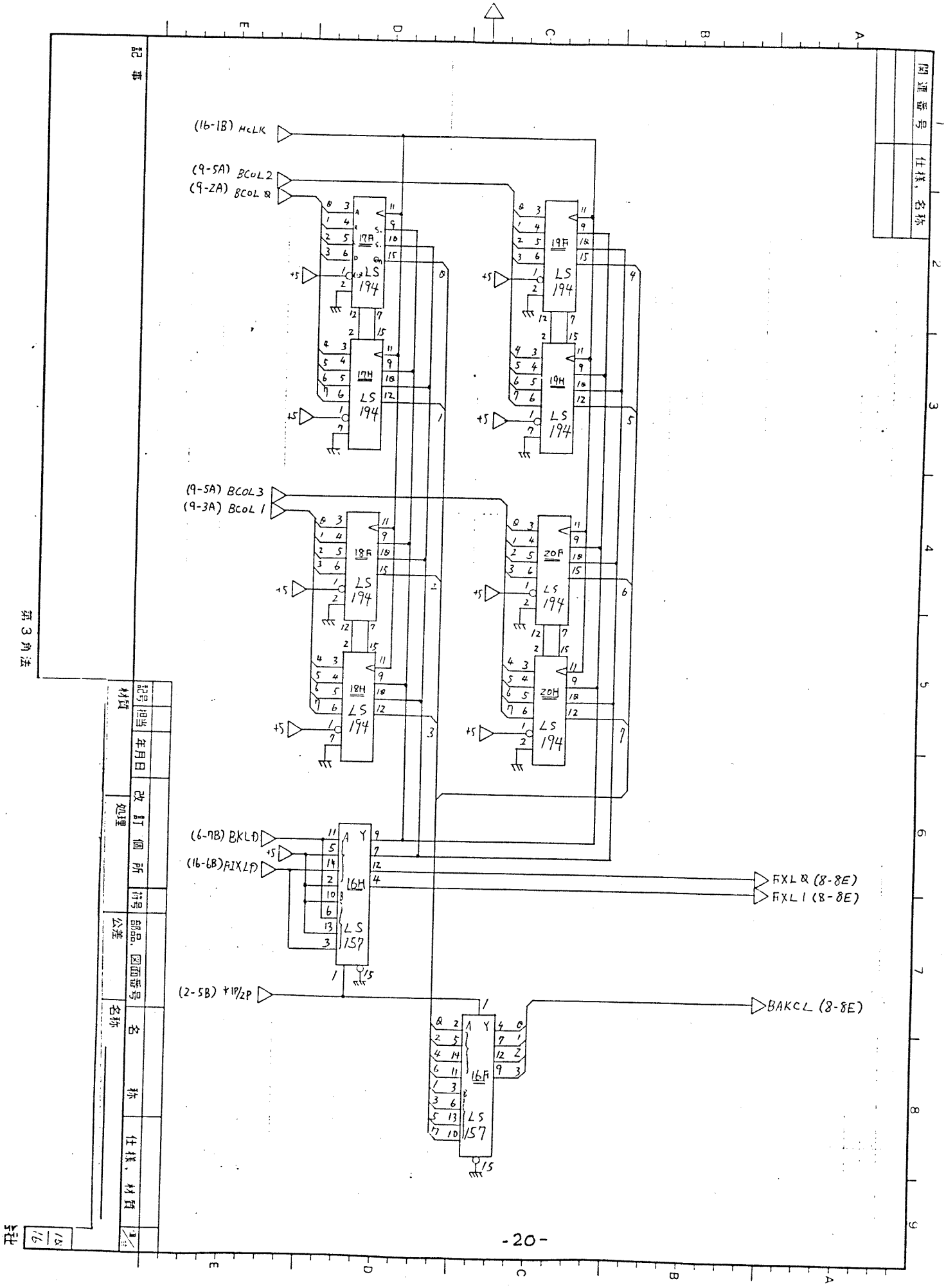
(16-1B) MCLK
(9-5A) BCOL2
(9-2A) BCOL 0
(9-5A) BCOL3
(9-3A) BCOL 1
17A LS 194
17H LS 194
19F LS 194
19H LS 194
18F LS 194
18H LS 194
20F LS 194
20H LS 194
(6-7B) BKLD
(16-6B) FIXLD
16H LS 157
FXL 0 (8-8E)
FXL 1 (8-8E)
(2-5B) ＋12/2P
16F LS 157
BAKCL (8-8E)
+5
関連番号
仕様，名称
記事
第3角法
記号
担当
年月日
改訂個所
材質
処理
公差
部品，図面番号
名称
仕様，材質
13/16
社

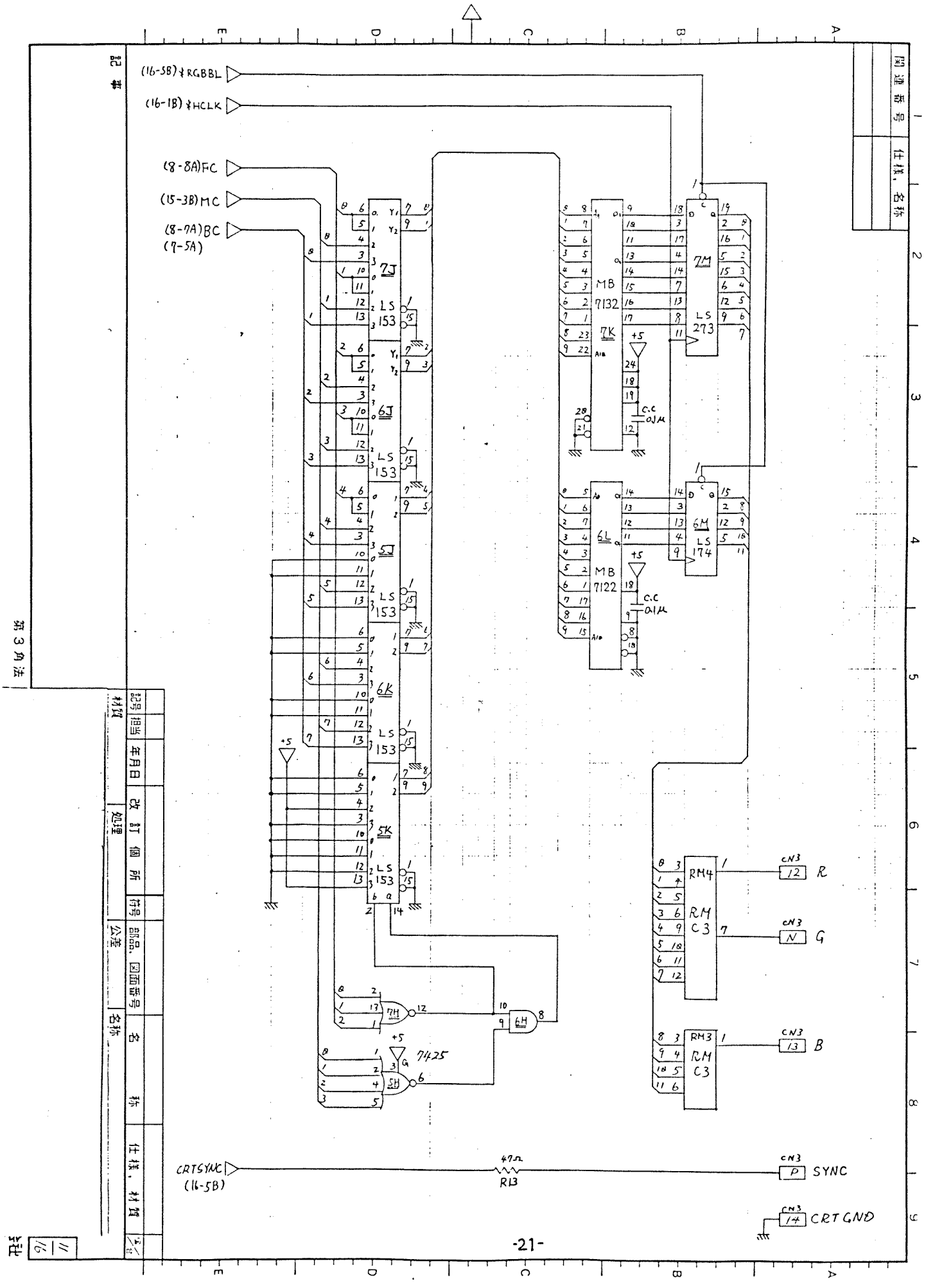
(16-5B)*RGBBL
(16-1B)*HCLK
(8-8A)FC
(15-3B)MC
(8-7A)BC
(7-5A)
7J
6J
5J
6K
5K
LS 153
7M
LS 273
6M
LS 174
7K
MB 7132
6L
MB 7122
C.C 0.1μ
+5
RM4
RM C3
RM3
CN3
R
G
B
7H
6H
5H
7425
CRTSYNC
(16-5B)
47Ω
R13
SYNC
CRT GND
関連番号
仕様，名称
記事
第3角法
記号
担当
年月日
改訂個所
符号
部品，図面番号
名称
仕様，材質
材質
処理
公差
社名
11/16

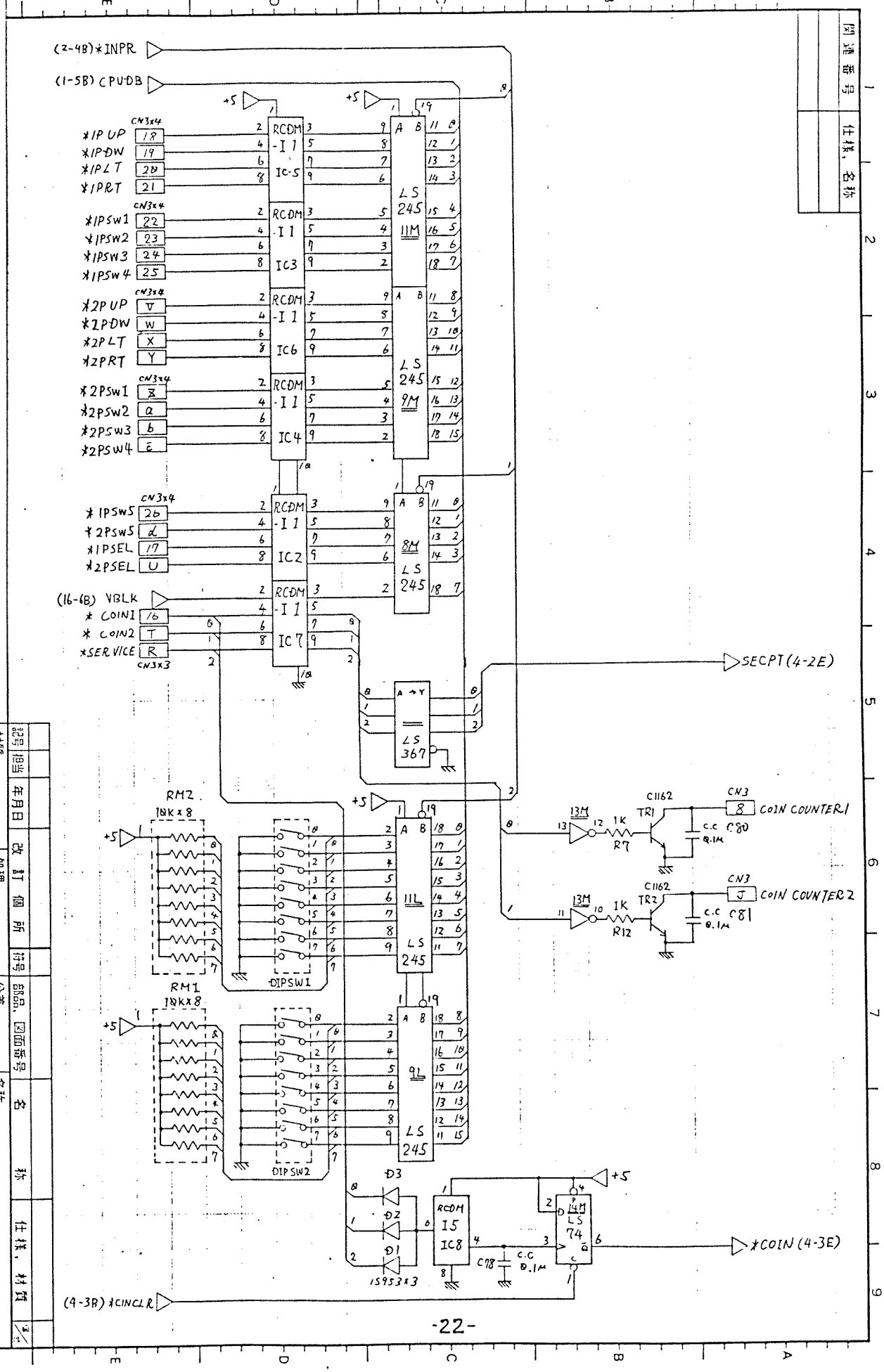
(2-4B)*INPR
(1-5B) CPUDB
*1P UP
*1P DW
*1P LT
*1P RT
*1PSW1
*1PSW2
*1PSW3
*1PSW4
*2P UP
*2P DW
*2P LT
*2P RT
*2PSW1
*2PSW2
*2PSW3
*2PSW4
*1PSW5
*2PSW5
*1PSEL
*2PSEL
(16-6B) VBLK
* COIN1
* COIN2
*SERVICE
CN3x4
CN3x3
RCDM-I1
IC-5
IC3
IC6
IC4
IC2
IC7
LS 245
11M
9M
8M
11L
9L
LS 367
SECPT (4-2E)
RM2
10K x 8
RM1
10K x 8
DIPSW1
DIPSW2
13M
1K
R7
R12
TR1
TR2
C1162
CN3
COIN COUNTER1
COIN COUNTER2
C80
C81
C.C 0.1M
D3
D2
D1
1S953x3
RCDM I5 IC8
C78
LS 74
*COIN (4-3E)
(4-3B) *CINCLR

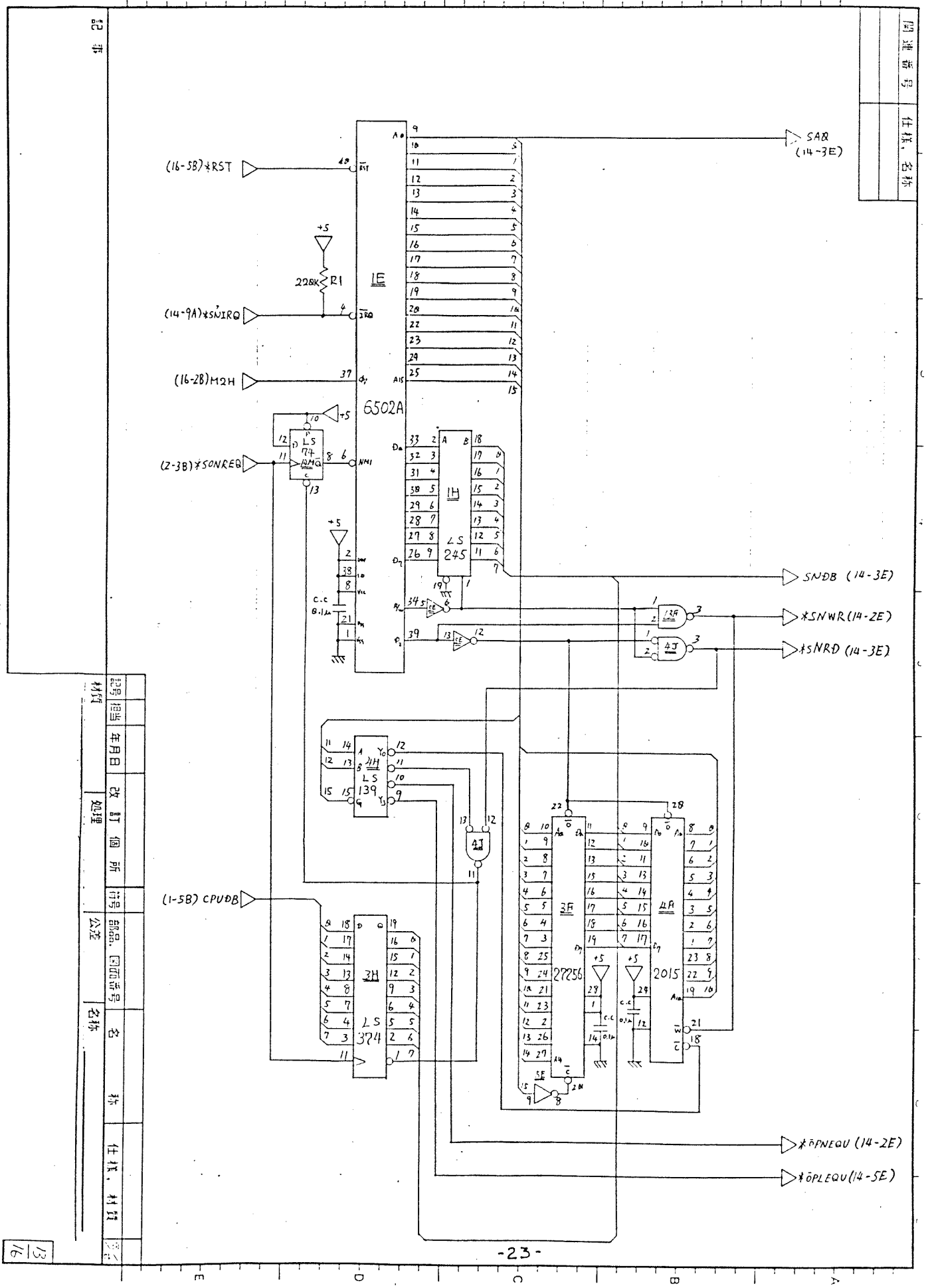
(16-5B)*RST
(14-9A)*SNIRQ
(16-2B)M2H
(2-3B)*SONREQ
(1-5B) CPUDB
SAR (14-3E)
SNDB (14-3E)
*SNWR (14-2E)
*SNRD (14-3E)
*OPNEQU (14-2E)
*OPLEQU (14-5E)
6502A
LS 245
LS 74
LS 139
LS 374
27256
2015
R1
228K
C.C 0.1μ

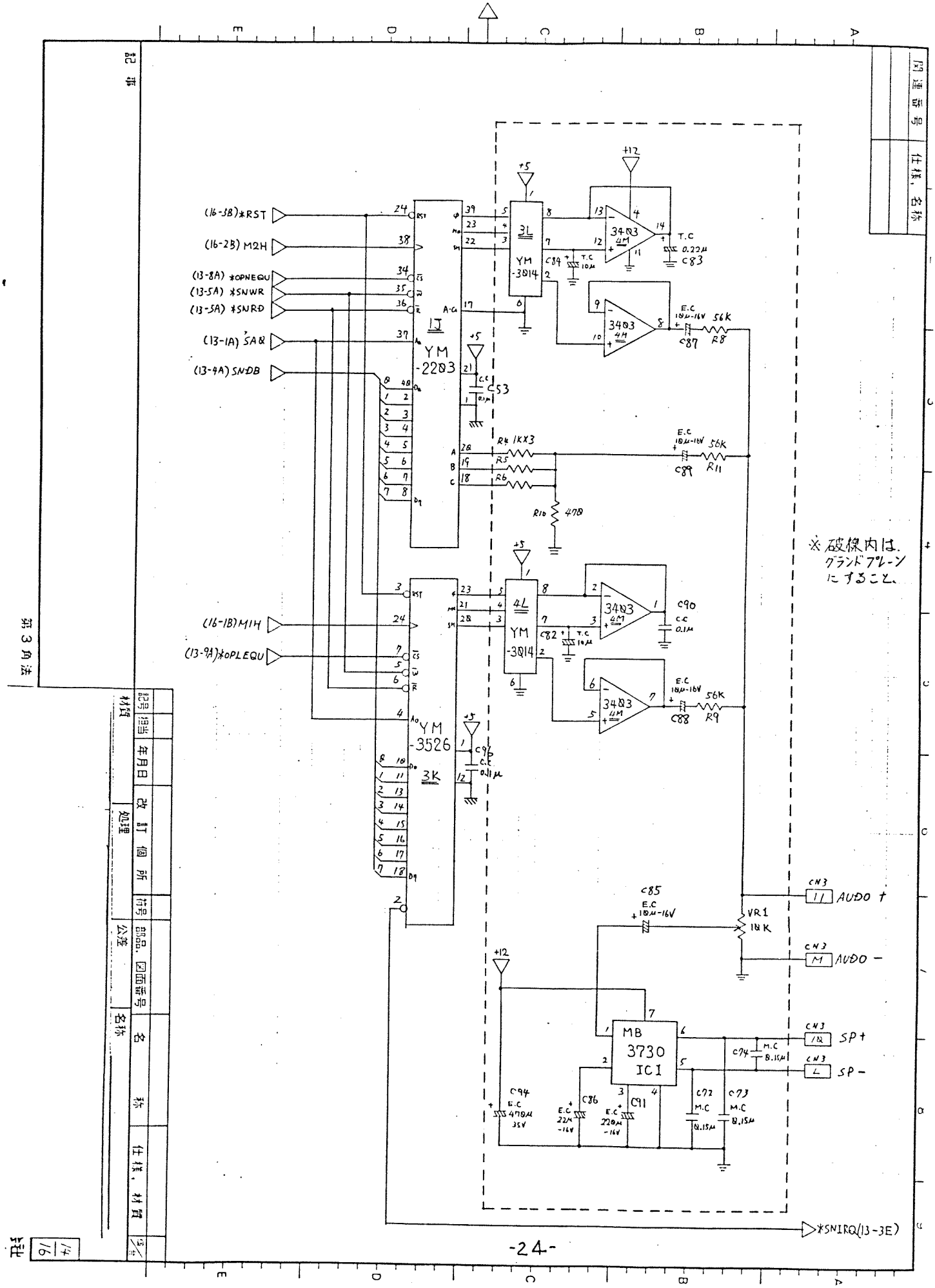
(16-3B)*RST
(16-2B) M2H
(13-8A) *OPNEQU
(13-5A) *SNWR
(13-5A) *SNRD
(13-1A) SA0
(13-4A) SNDB
(16-1B) M1H
(13-9A) *OPLEQU
YM-2203
YM-3526
YM-3014
3403
MB 3730 IC1
AUDO +
AUDO −
SP +
SP −
*SNIRQ(13-3E)
※破線内は、グランドプレーンにすること。

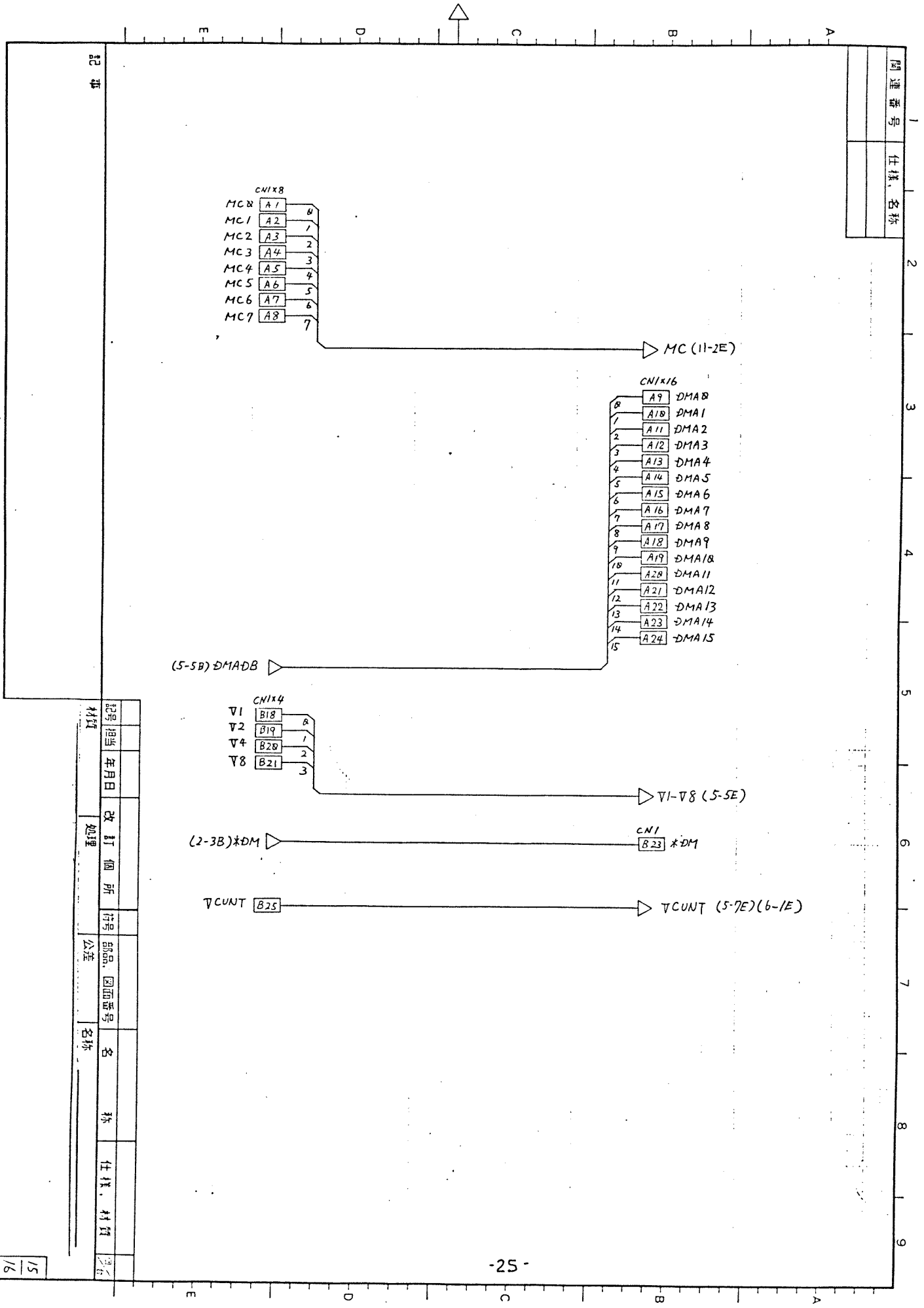
CN1×8
MC8 A1 8
MC1 A2 1
MC2 A3 2
MC3 A4 3
MC4 A5 4
MC5 A6 5
MC6 A7 6
MC7 A8 7
MC (11-2E)
CN1×16
A9 DMA8
A10 DMA1
A11 DMA2
A12 DMA3
A13 DMA4
A14 DMA5
A15 DMA6
A16 DMA7
A17 DMA8
A18 DMA9
A19 DMA10
A20 DMA11
A21 DMA12
A22 DMA13
A23 DMA14
A24 DMA15
(5-5B) DMADB
CN1×4
∇1 B18 8
∇2 B19 1
∇4 B20 2
∇8 B21 3
∇1-∇8 (5-5E)
(2-3B)*DM
CN1
B23 *DM
∇CUNT B25
∇CUNT (5-7E)(6-1E)
関連番号
仕様，名称
記事
第3角法
記号 担当 年月日 改訂個所 符号 部品，図面番号 名称 仕様，材質 数
材質
処理
公差
名称
15/16
-25-

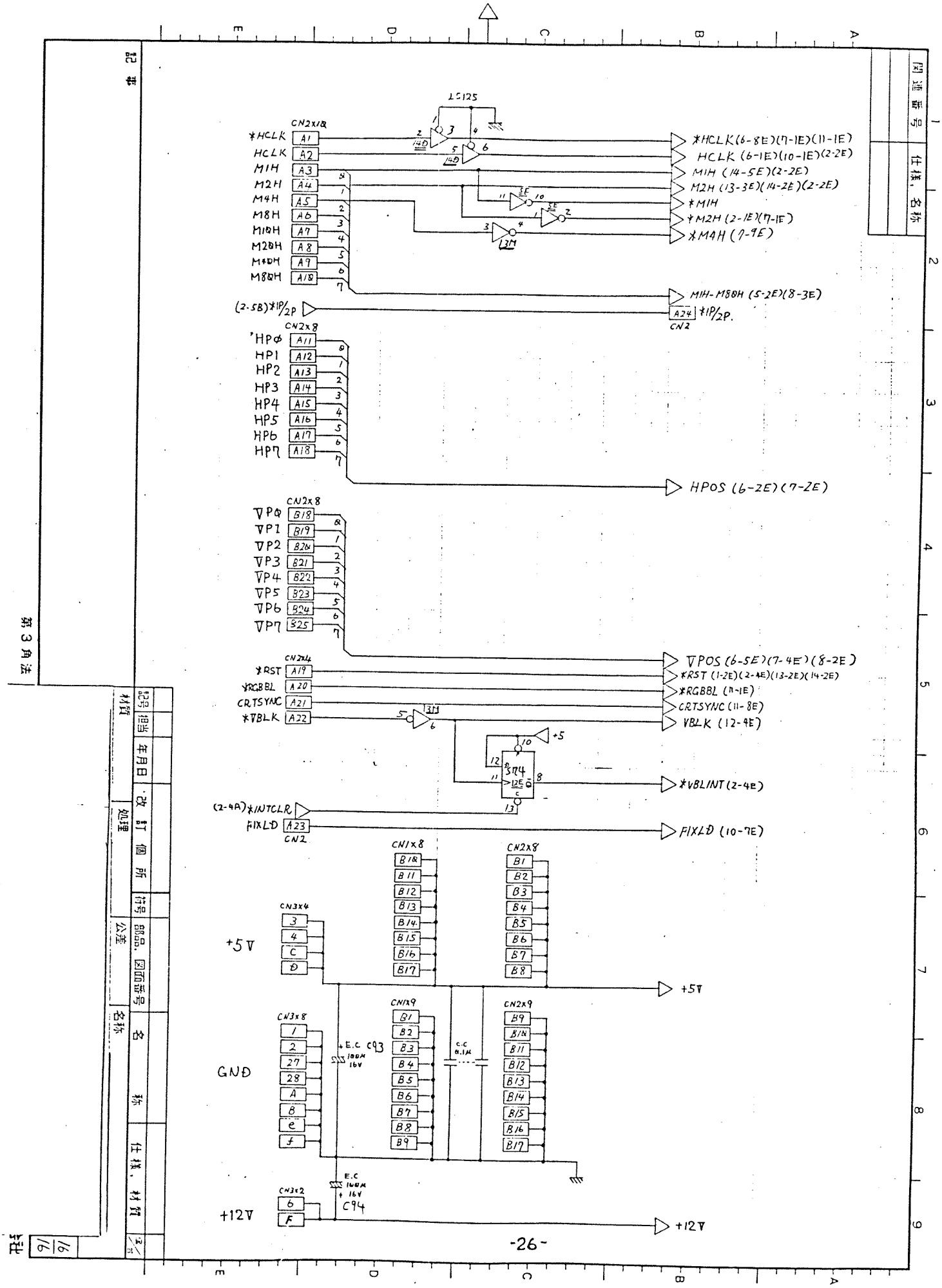
LS125
CN2x18
*HCLK A1
HCLK A2
M1H A3
M2H A4
M4H A5
M8H A6
M10H A7
M20H A8
M40H A9
M80H A18
*HCLK (6-8E)(7-1E)(11-1E)
HCLK (6-1E)(10-1E)(2-2E)
M1H (14-5E)(2-2E)
M2H (13-3E)(14-2E)(2-2E)
*M1H
*M2H (2-1E)(7-1E)
*M4H (7-9E)
M1H-M80H (5-2E)(8-3E)
(2-5B)*1P/2P
A24 *1P/2P.
CN2
CN2x8
HP0 A11
HP1 A12
HP2 A13
HP3 A14
HP4 A15
HP5 A16
HP6 A17
HP7 A18
HPOS (6-2E)(7-2E)
CN2x8
VP0 B18
VP1 B19
VP2 B20
VP3 B21
VP4 B22
VP5 B23
VP6 B24
VP7 B25
VPOS (6-5E)(7-4E)(8-2E)
CN2x4
*RST A19
*RGBBL A20
CRTSYNC A21
*VBLK A22
*RST (1-2E)(2-4E)(13-2E)(14-2E)
*RGBBL (7-1E)
CRTSYNC (11-8E)
VBLK (12-4E)
+5
374
*VBLINT (2-4E)
(2-4A)*INTCLR
FIXLD A23
CN2
FIXLD (10-7E)
CN1x8
CN2x8
CN3x4
+5V
+5V
CN1x9
CN2x9
CN3x8
GND
E.C C93
100μ 16V
C.C 0.1μ
E.C 100μ 16V C94
CN3x2
+12V
+12V

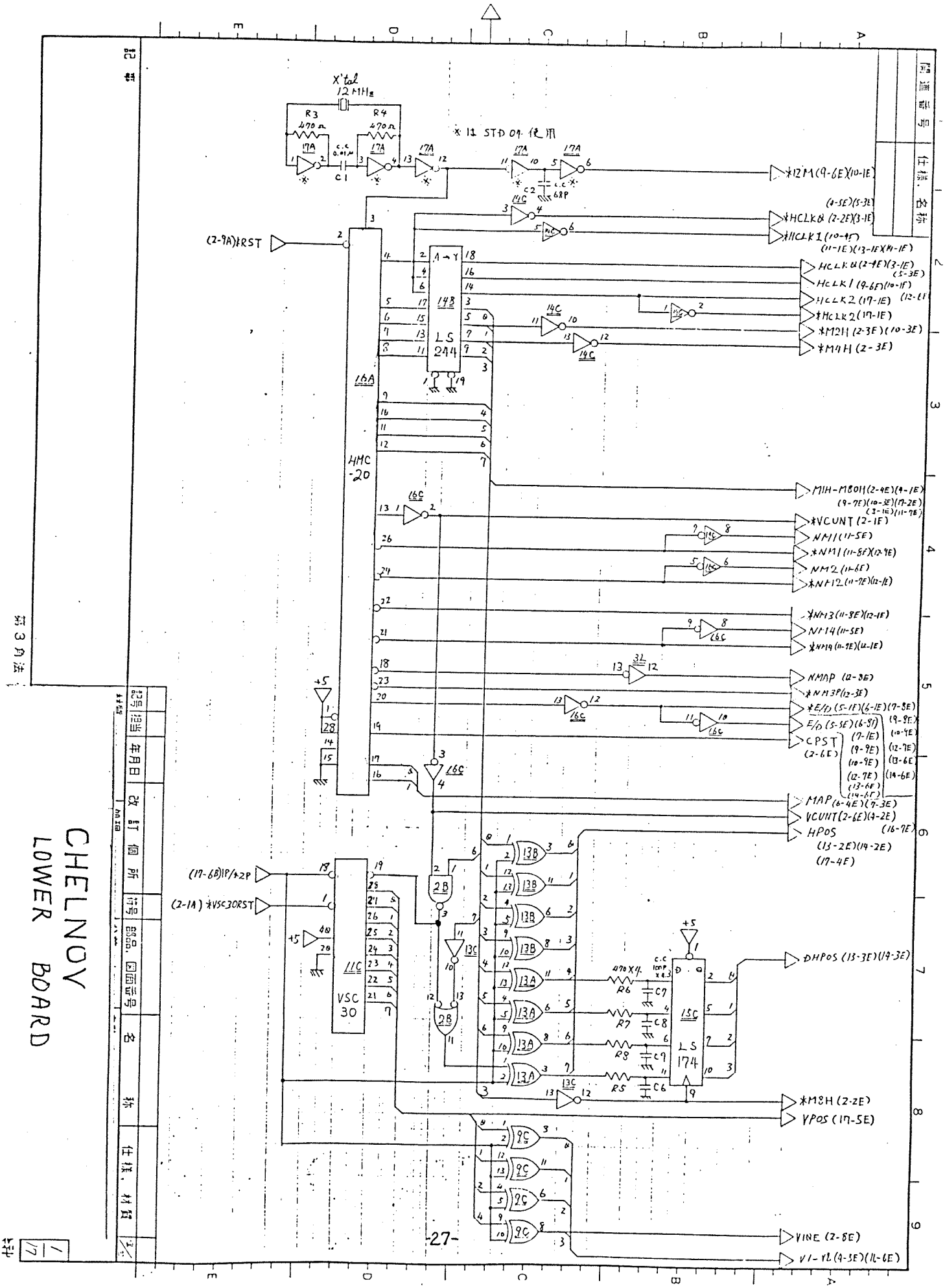
X'tal
12 MHz
R3
470Ω
R4
470Ω
C1
C2
68P
17A
14C
16C
13B
13A
9C
2B
16A
HMC
-20
148
LS
244
VSC
30
11C
15C
LS
174
R6
R7
R8
R5
C7
C8
C9
C6
(2-9A)RST
*12M (9-6E)(10-1E)
(4-5E)(5-3E)
*HCLK0 (2-2E)(3-1E)
*HCLK1 (10-4E)
(11-1E)(13-1E)(14-1E)
HCLK0 (2-4E)(3-1E)
(5-3E)
HCLK1 (9-6E)(10-1F)
(12-6F)
HCLK2 (17-1E)
*HCLK2 (17-1E)
*M2H (2-3E)(10-3E)
*M4H (2-3E)
M1H-M8011 (2-4E)(4-1E)
(9-7E)(10-3E)(17-2E)
(3-1E)(11-7E)
*VCUNT (2-1F)
NM1 (11-5E)
*NM1 (11-8E)(12-9E)
NM2 (11-6E)
*NM2 (11-7E)(12-1E)
*NM3 (11-8E)(12-1E)
NM4 (11-5E)
*NM4 (11-7E)(12-1E)
NMAP (12-8E)
*NM3P (12-3E)
*E/D (5-1E)(6-1E)(7-8E)
E/D (5-5E)(6-8F)
(9-8E)
(10-9E)
(12-7E)
(13-6E)
(14-6E)
CPST
(2-6E)
(7-1E)
(9-9E)
(10-9E)
(12-7E)
(13-6E)
(14-6E)
MAP (6-4E)(7-3E)
VCUNT (2-6E)(4-2E)
HPOS
(13-2E)(14-2E)
(16-7E)
(17-4E)
(17-6B)18/*2P
(2-1A) *VSC30RST
DHPOS (13-3E)(14-3E)
*M8H (2-2E)
VPOS (17-5E)
VINE (2-8E)
V1-V2 (4-3E)(11-6E)
CHELNOY
LOWER BOARD

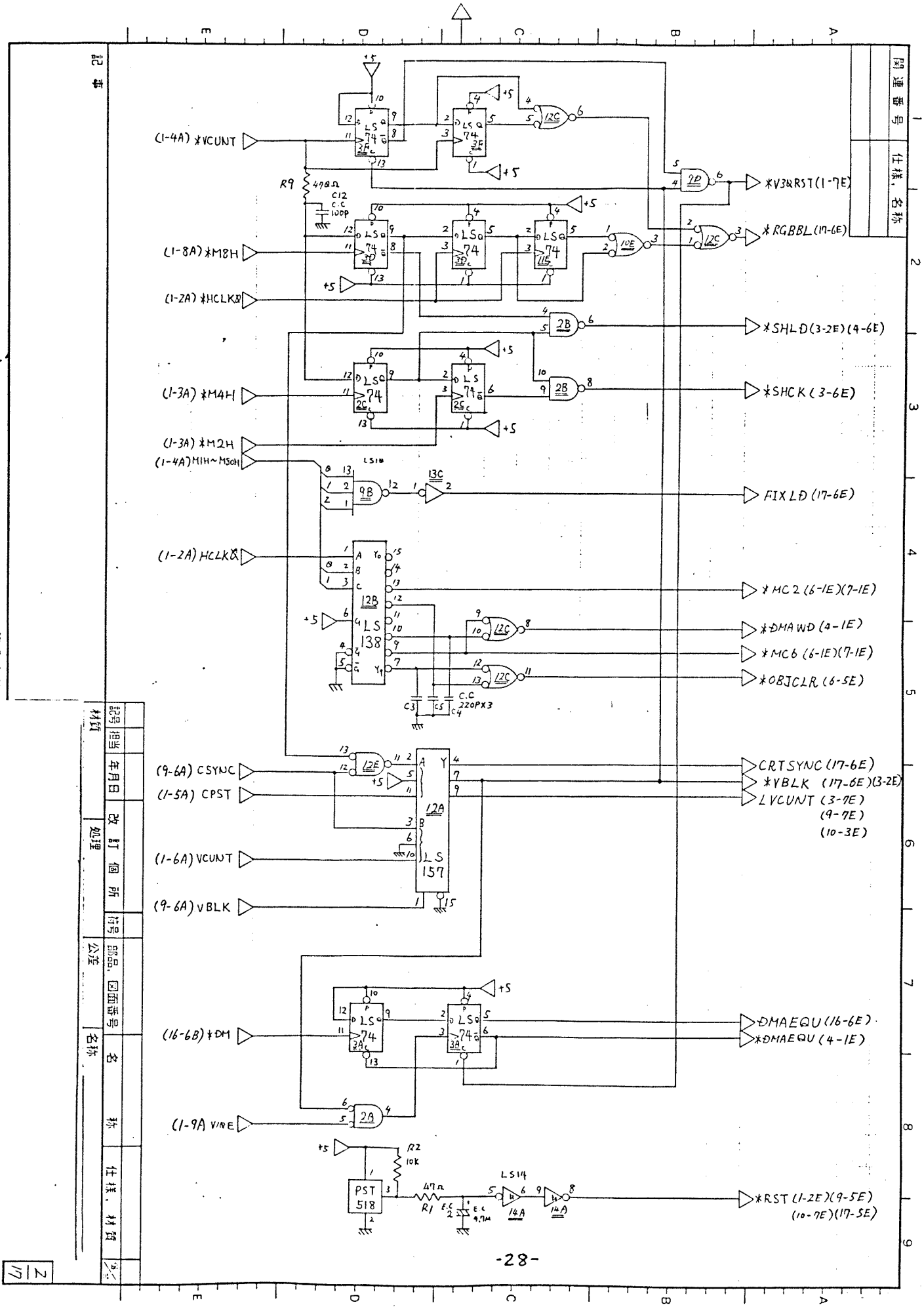
(1-4A) *VCUNT
R9 470Ω
C12 C.C 100P
(1-8A) *M8H
(1-2A) *HCLK8
(1-3A) *M4H
(1-3A) *M2H
(1-4A) M1H~M5CH
(1-2A) HCLK8
(9-6A) CSYNC
(1-5A) CPST
(1-6A) VCUNT
(9-6A) VBLK
(16-6B) *DM
(1-9A) V/BE
*V3&RST (1-7E)
*RGBBL (17-6E)
*SHLD (3-2E) (4-6E)
*SHCK (3-6E)
FIX LD (17-6E)
*MC2 (6-1E) (7-1E)
*DMA WD (4-1E)
*MC6 (6-1E) (7-1E)
*OBJCLR (6-5E)
CRTSYNC (17-6E)
*VBLK (17-6E) (3-2E)
LVCUNT (3-7E) (9-7E) (10-3E)
DMAEQU (16-6E)
*DMAEQU (4-1E)
*RST (1-2E) (9-5E) (10-7E) (17-5E)
C.C 220PX3
R2 10K
PST 518
47Ω R1
LS14
14A
LS74
LS138
LS157
12B
12C
12D
12E
12A
2D
2B
2A
9B
13C
10E
11E
3B
3A
2C
2S
+5

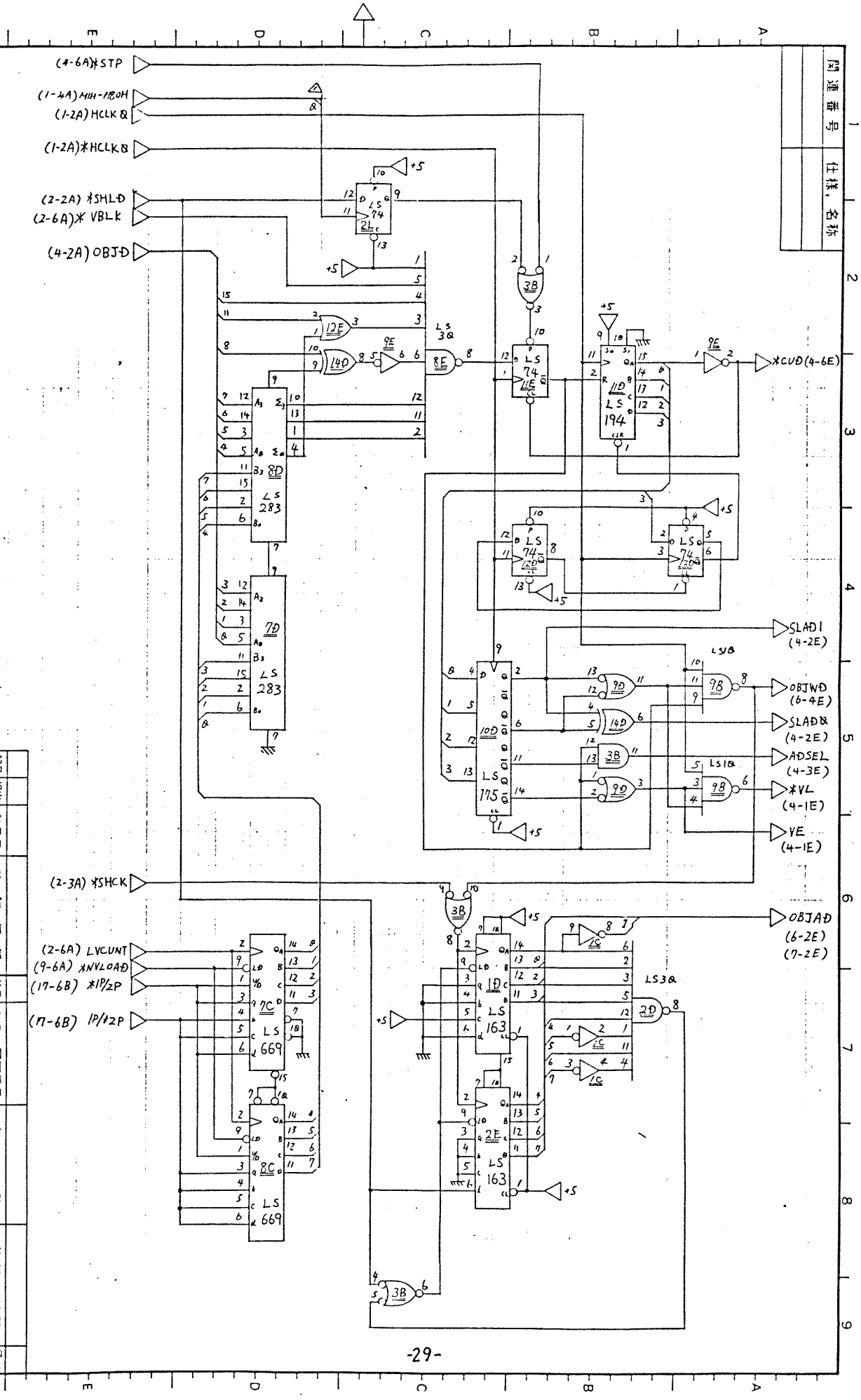

記事 △.(1D).6.10.15 條件、回路変更後 修正之

第3角法

材質	記号 担当	年月日	改訂個所	符号	部品、図面番号	名称	仕様、材質
処理							
公差							

3/17

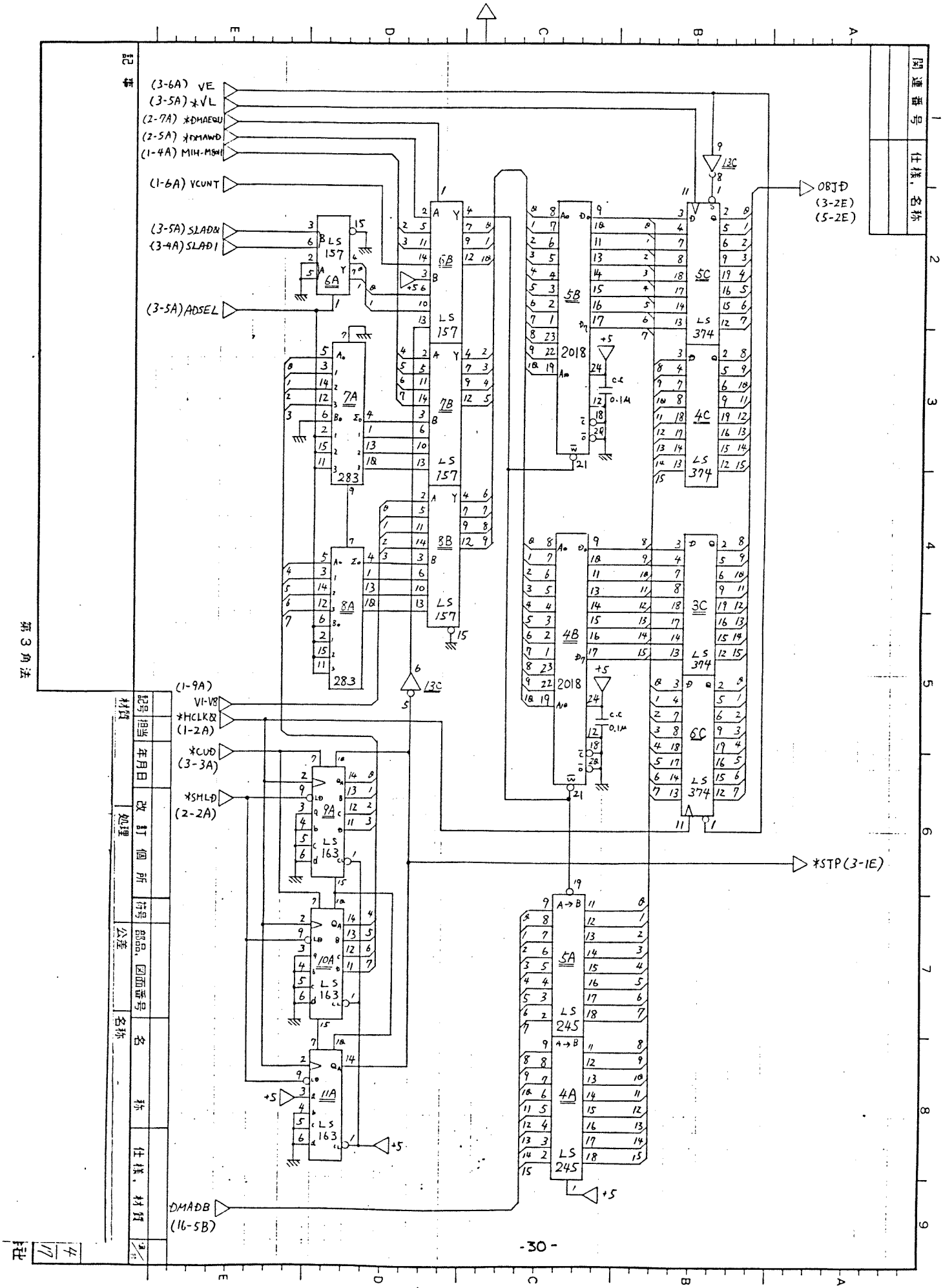
(3-6A) VE
(3-5A) *VL
(2-7A) *DMAEQU
(2-5A) *DMAWD
(1-4A) M1H-M8H
(1-6A) VCUNT
(3-5A) SLAD0
(3-4A) SLAD1
(3-5A) ADSEL
(1-9A) V1-V8
*HCLK0
(1-2A)
*CUD
(3-3A)
*SHLD
(2-2A)
DMADB
(16-5B)
OBJD
(3-2E)
(5-2E)
*STP (3-1E)
LS 157
LS 374
LS 163
LS 245
2018
283
6A
6B
7A
7B
8A
8B
5B
4B
5C
4C
3C
6C
9A
10A
11A
5A
4A
13C
0.1μ
C.C
記事
第3角法
材質
記号 担当
年月日
改訂個所
符号
部品、図面番号
公差
名称
仕様、材質
処理
-30-

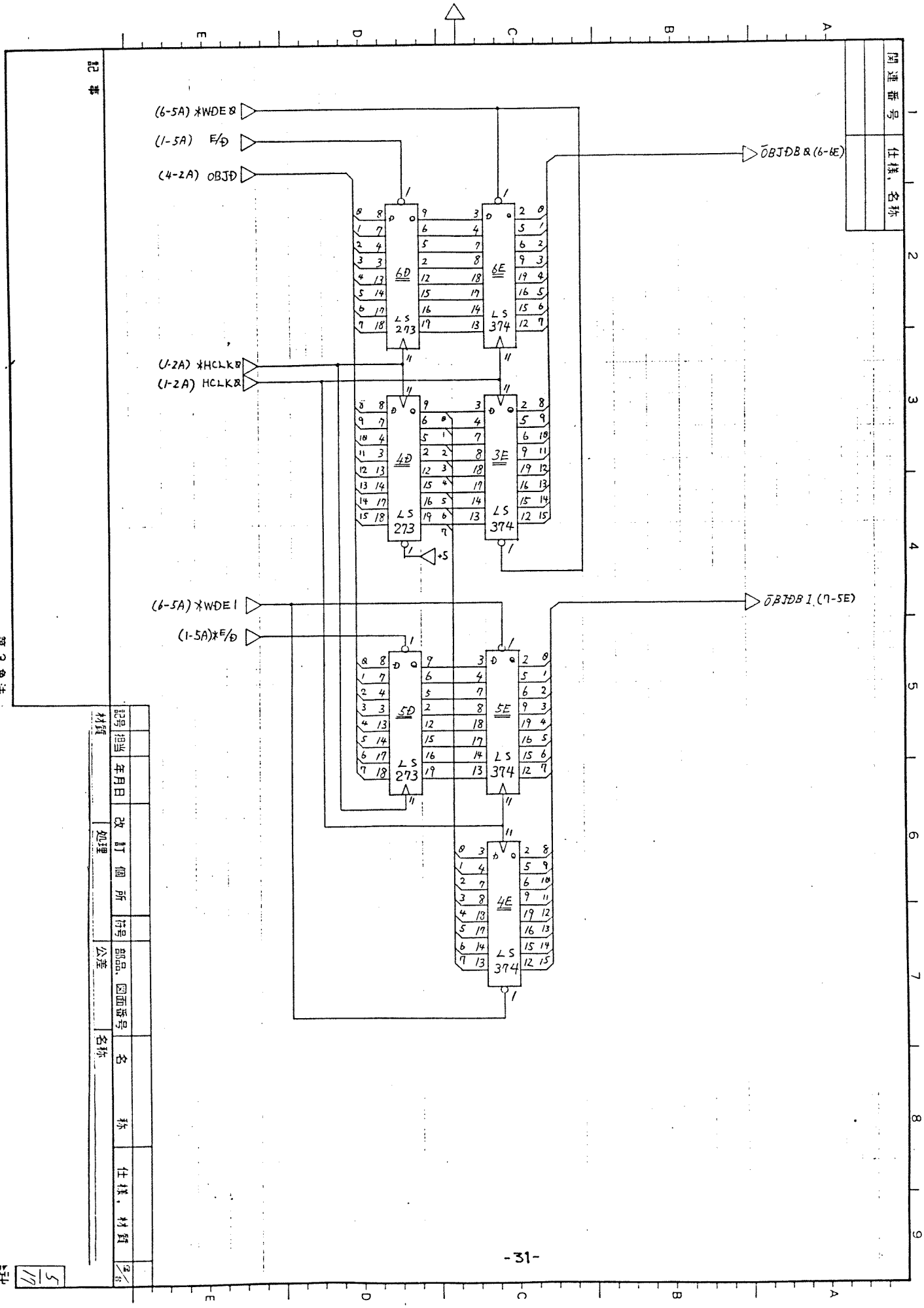
(6-5A) *WDE8
(1-5A) E/D
(4-2A) OBJD
(1-2A) *HCLK8
(1-2A) HCLK8
(6-5A) *WDE1
(1-5A) *E/D
OBJDB8 (6-6E)
OBJDB1 (7-5E)
6D
6E
4D
3E
5D
5E
4E
LS 273
LS 374
+5
関連番号
仕様，名称
記事
第3角法
記号
担当
年月日
改訂
個所
付号
部品，図面番号
名称
仕様，材質
材質
処理
公差
名称
5/17
-31-

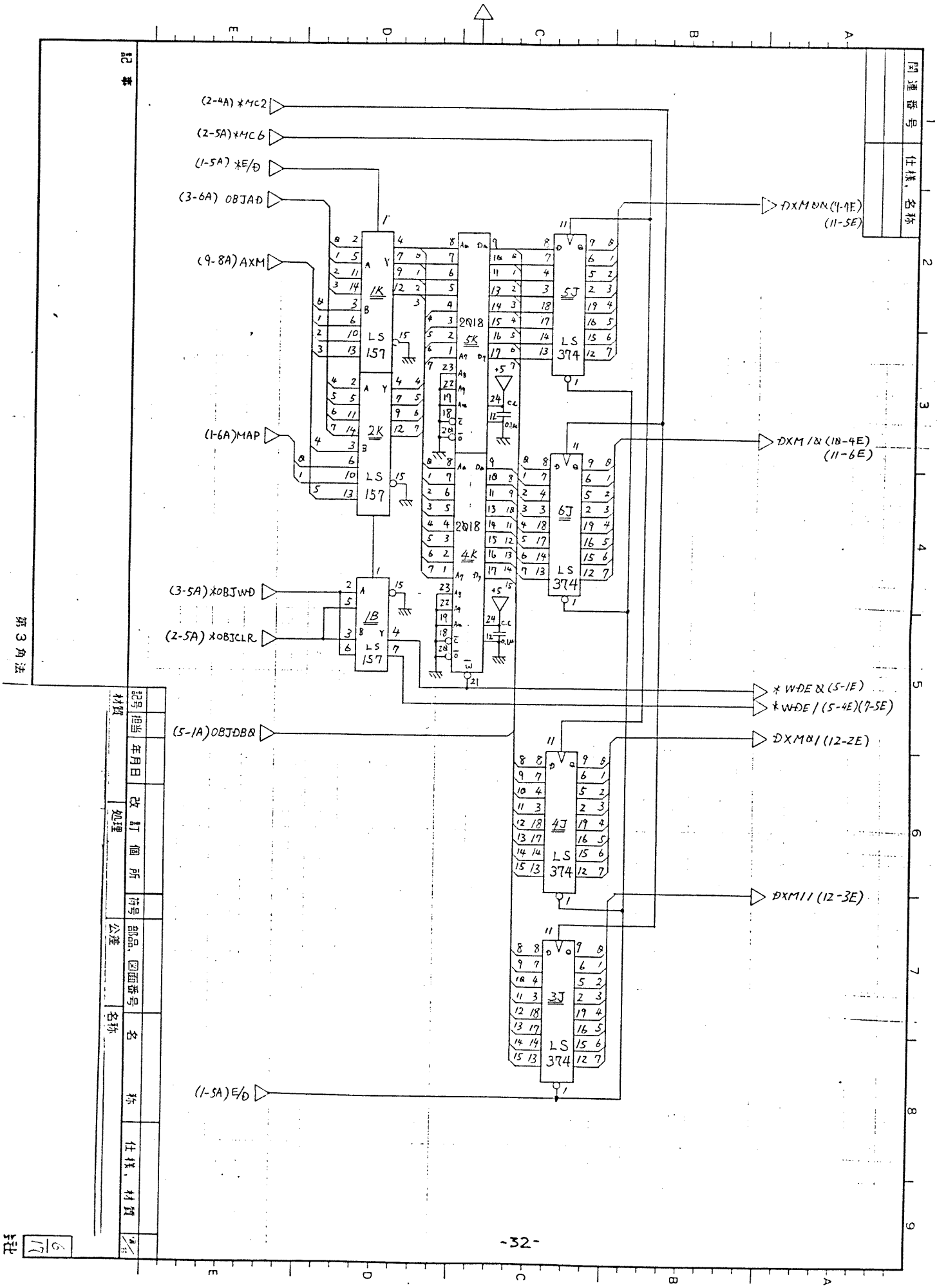
(2-4A) *MC2
(2-5A) *MC6
(1-5A) *E/D
(3-6A) OBJAD
(9-8A) AXM
(1-6A) MAP
(3-5A) *OBJWD
(2-5A) *OBJCLR
(5-1A) OBJDB0
(1-5A) E/D
DXM0N (9-9E) (11-5E)
DXM1N (10-4E) (11-6E)
*WDE0 (5-1E)
*WDE1 (5-4E)(7-5E)
DXM0I (12-2E)
DXM1I (12-3E)
1K LS 157
2K LS 157
1B LS 157
2018 5K
2018 4K
5J LS 374
6J LS 374
4J LS 374
3J LS 374
+5
0.1μ
記号 担当 年月日 改訂個所 符号 部品, 図面番号 名称 仕様, 材質
関連番号 仕様, 名称
材質 処理 公差 名称
第3角法
-32-

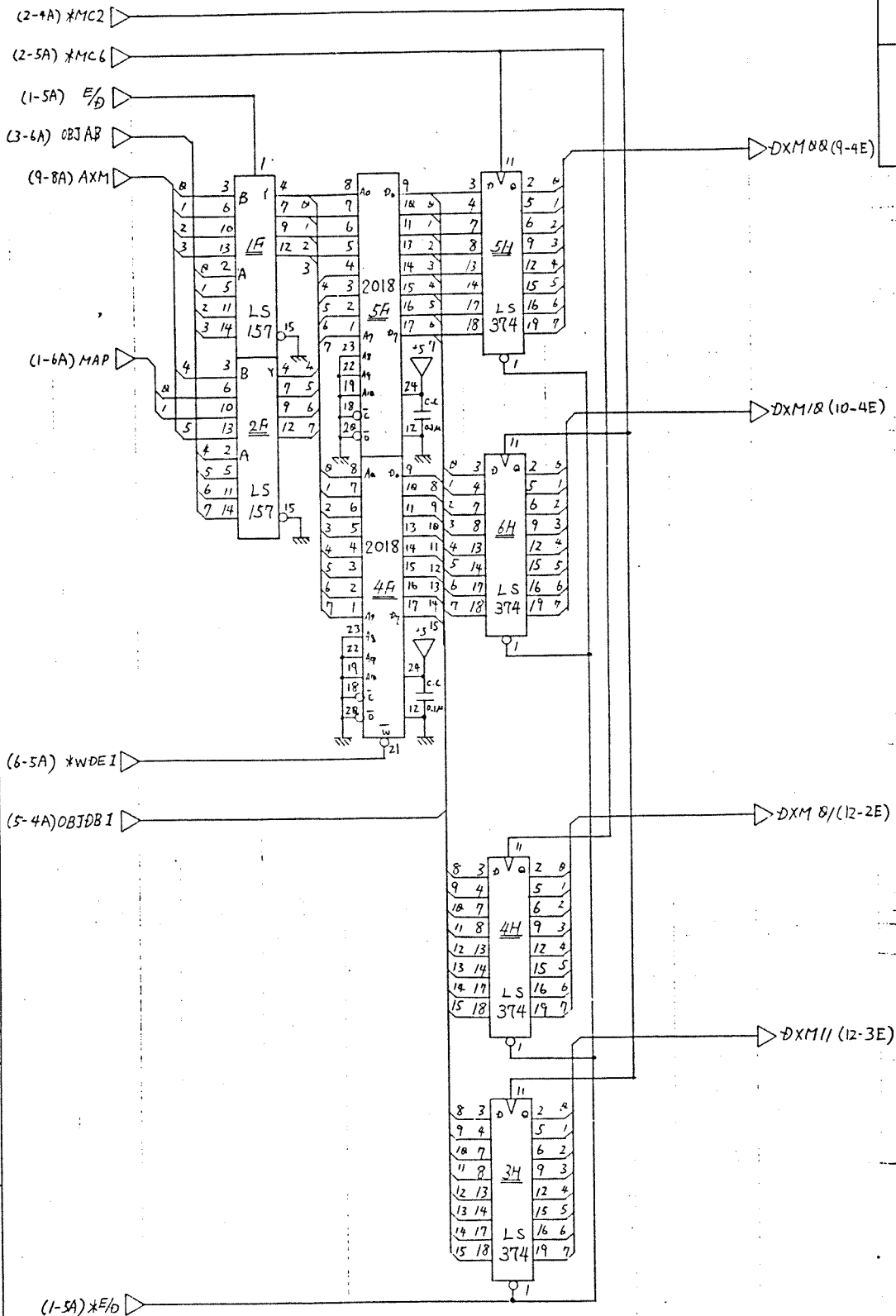

関連番号	仕様，名称

記号	担当	年月日	改訂個所	付号	部品，図面番号	名称	仕様，材質	工数
材質		処理		公差				

記事

第3角法

7/17

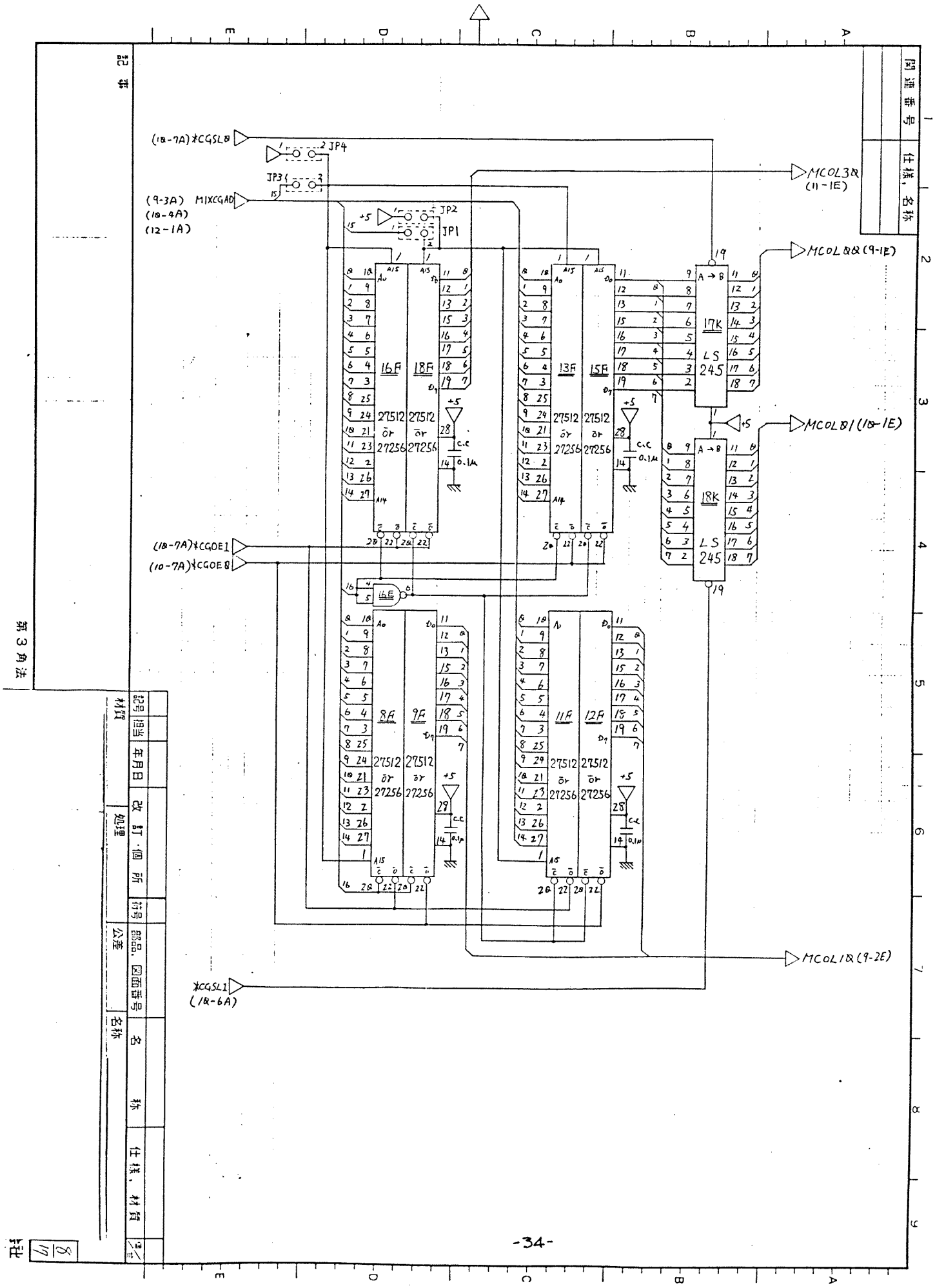
(18-7A)*CGSL8
JP4
JP3
(9-3A) MIXCGAD
(18-4A)
(12-1A)
JP2
JP1
+5
MCOL3&
(11-1E)
MCOL8&(9-1E)
MCOL8!(18-1E)
16F
18F
13F
15F
17K
18K
LS 245
27512 or 27256
0.1μ
(18-7A)*CGOE1
(10-7A)*CGOE8
16E
8F
9F
11F
12F
MCOL1&(9-2E)
*CGSL1
(18-6A)
記事
第3角法
関連番号
仕様,名称
記号
担当
年月日
改訂・個所
符号
部品,図面番号
名称
仕様,材質
材質
処理
公差
名称
社
8/11

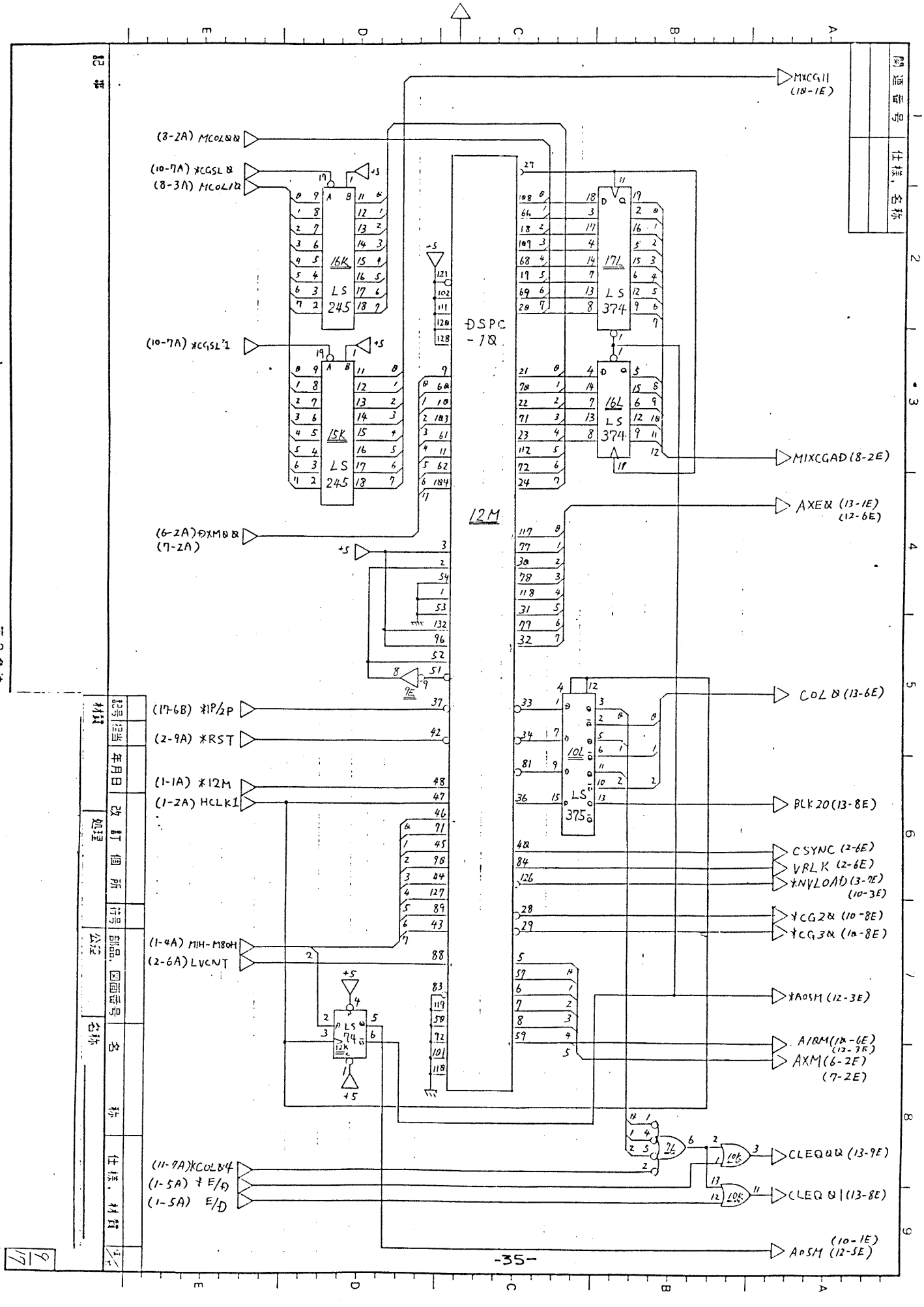
MXCG11 (18-1E)
(3-2A) MCOL&R
(10-7A) *CGSL&
(8-3A) MCOL1&
(10-7A) *CGSL'1
(6-2A) DXM8&
(7-2A)
(17-6B) *1P/2P
(2-9A) *RST
(1-1A) *12M
(1-2A) HCLK1
(1-4A) M1H-M80H
(2-6A) LVCNT
(11-9A) KCOL&4
(1-5A) *E/D
(1-5A) E/D
16K
LS 245
15K
LS 245
DSPC-1&
12M
17L
LS 374
16L
LS 374
10L
LS 375
LS 74
MIXCGAD (8-2E)
AXE& (13-1E) (12-6E)
COL& (13-6E)
BLK20 (13-8E)
CSYNC (2-6E)
VRLK (2-6E)
*NVLOAD (3-7E) (10-3E)
*CG2& (10-8E)
*CG3& (10-8E)
*AOSM (12-3E)
A1&M (10-6E) (12-7E)
AXM (6-2E) (7-2E)
CLEQ&&(13-9E)
CLEQ&1 (13-8E)
AOSM (10-1E) (12-5E)
-35-

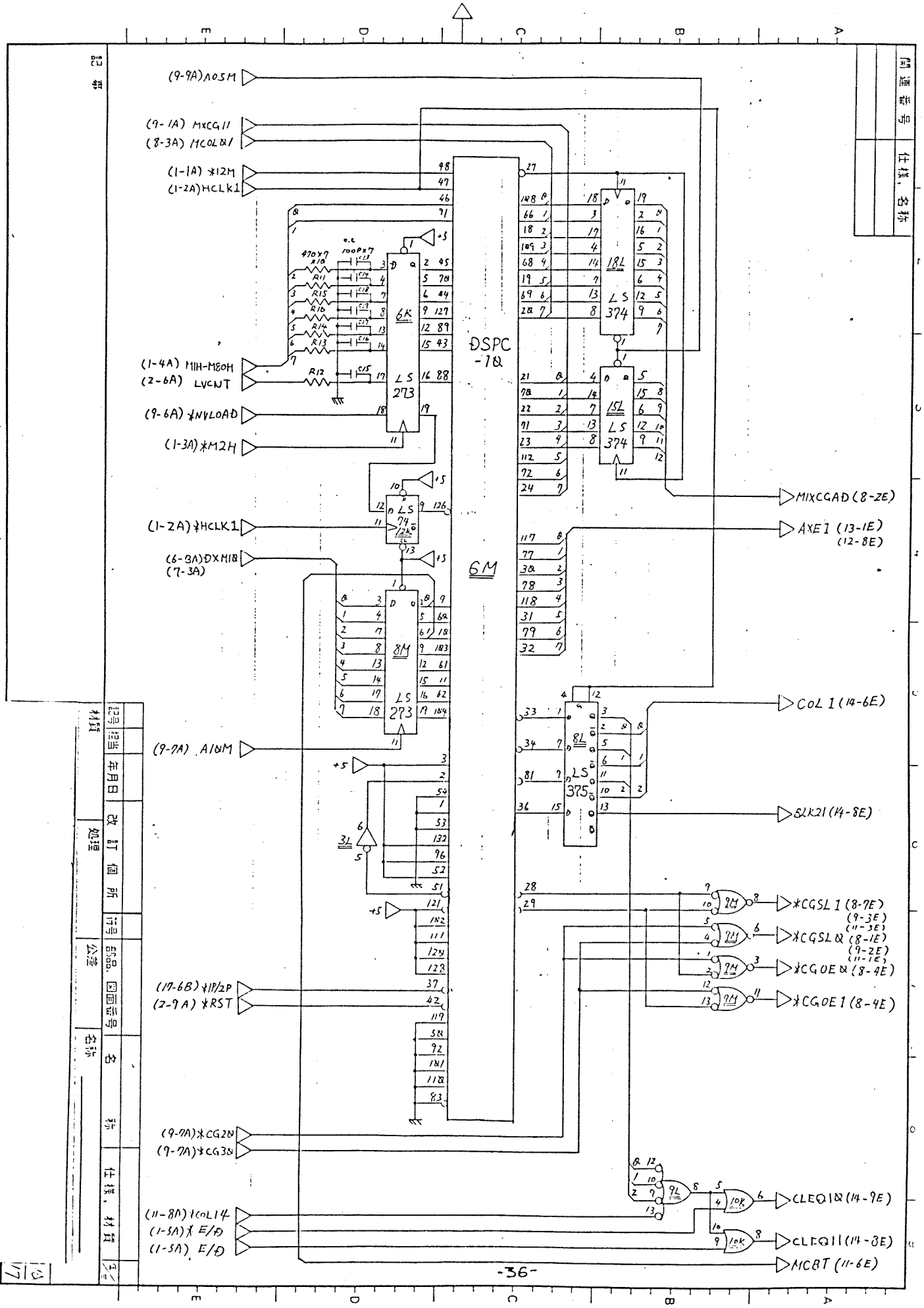
(9-9A)A05M
(9-1A) MXCG11
(8-3A) MCOL&1
(1-1A) *12M
(1-2A)HCLK1
(1-4A) M1H-M80H
(2-6A) LVCNT
(9-6A) *NVLOAD
(1-3A)*M2H
(1-2A)*HCLK1
(6-9A)DXM18
(7-3A)
(9-7A) A18M
(17-6B)*1P/2P
(2-9A) *RST
(9-7A)*CG2&
(9-7A)*CG3&
(11-8A)*COL14
(1-5A)* E/D
(1-5A) E/D
DSPC-7&
6K
LS 273
LS 374
LS 374
LS 74
8M
LS 273
6M
8L
LS 375
MIXCGAD (8-2E)
AXE1 (13-1E)
(12-8E)
COL 1 (14-6E)
BLK21 (14-8E)
*CGSL 1 (8-7E)
(9-3E)
(11-3E)
*CGSL& (8-1E)
(9-2E)
(11-1E)
*CG0E& (8-4E)
*CG0E1 (8-4E)
CLEQ1& (14-9E)
CLEQ11 (14-8E)
MCBT (11-6E)
-36-

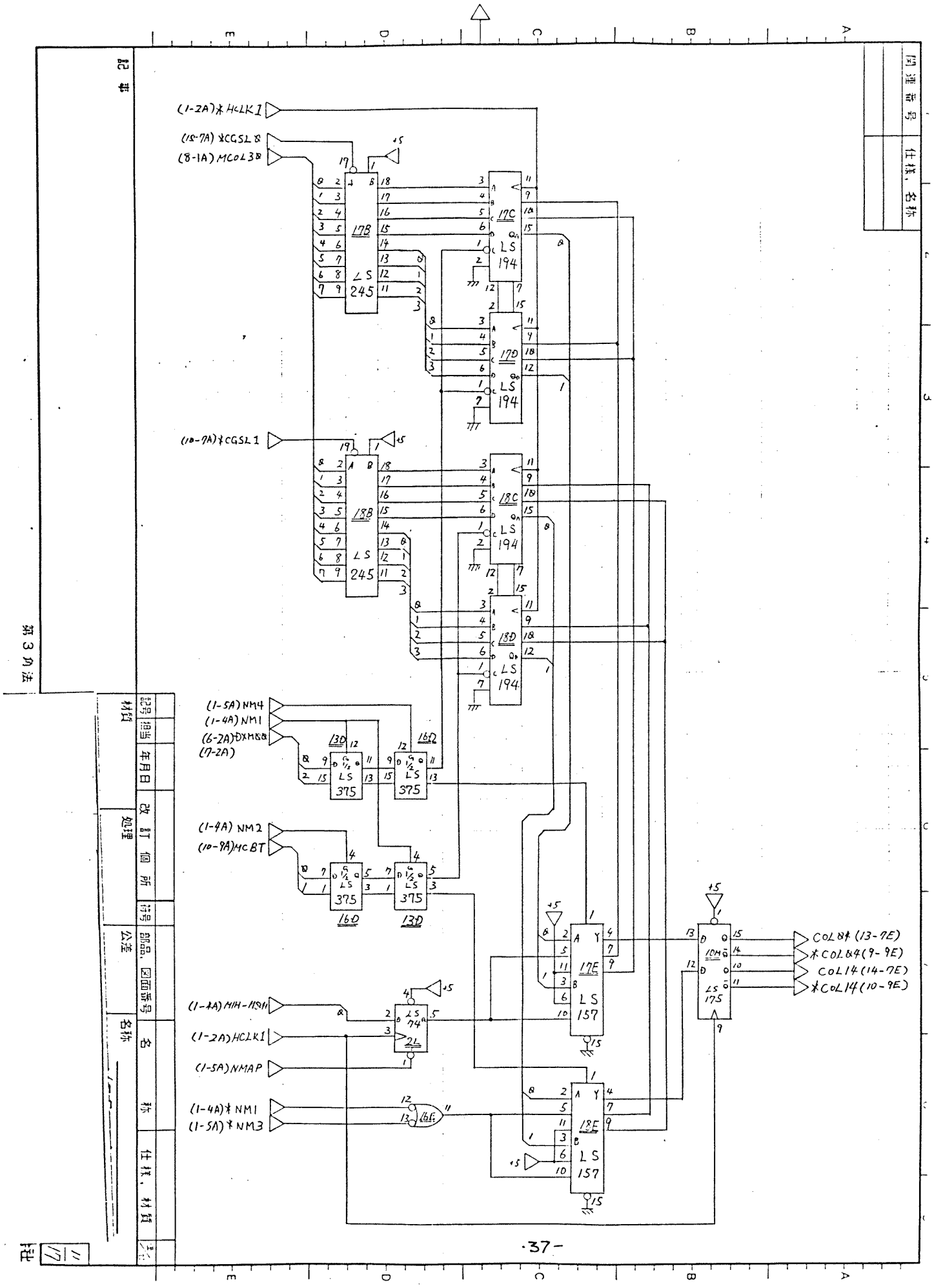
(1-2A)*HCLK1
(15-7A)*CGSL8
(8-1A)MCOL3B
(10-7A)*CGSL1
(1-5A)NM4
(1-4A)NM1
(6-2A)DXMB8
(7-2A)
(1-4A)NM2
(10-9A)HCBT
(1-4A)MIH-HSH1
(1-2A)HCLK1
(1-5A)NMAP
(1-4A)*NM1
(1-5A)*NM3
COL8*(13-7E)
COL8(9-9E)
COL14(14-7E)
*COL14(10-9E)
LS 245
LS 194
LS 375
LS 74
LS 157
LS 175
17B
17C
17D
18B
18C
18D
13D
16D
17E
18E
10M
21
16E
+5
記事
第3角法
材質
処理
公差
名称
仕様，材質
図面番号
図面番号
仕様，名称

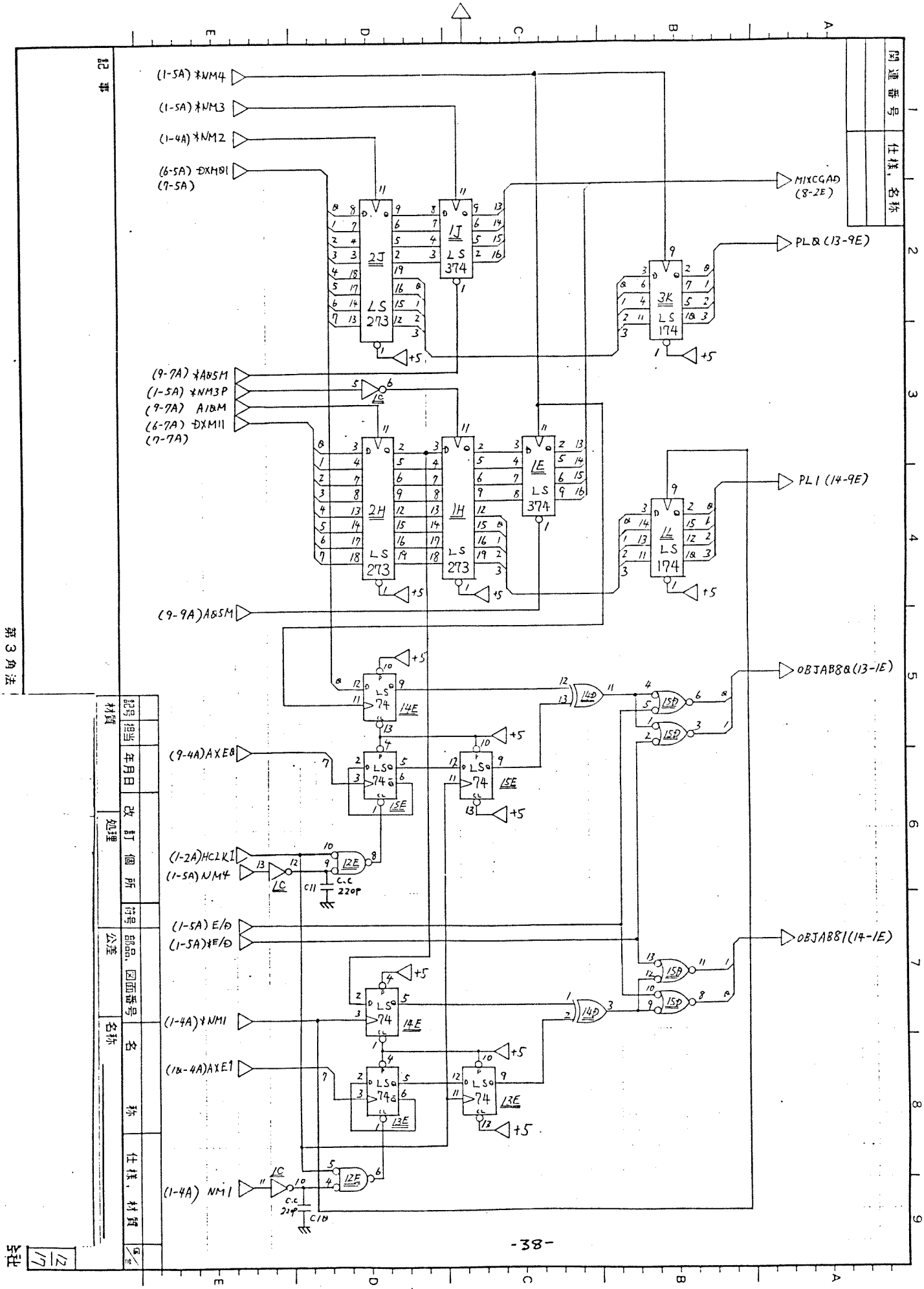
(1-5A) *NM4
(1-5A) *NM3
(1-4A) *NM2
(6-5A) DXM01
(7-5A)
MIXCGAD
(8-2E)
PLB (13-9E)
2J
LS 273
1J
LS 374
3K
LS 174
(9-7A) *ABSM
(1-5A) *NM3P
(9-7A) AIBM
(6-7A) DXM11
(7-7A)
2H
LS 273
1H
LS 273
1E
LS 374
1L
LS 174
PL1 (14-9E)
(9-9A) ABSM
OBJAB8B (13-1E)
14E
15E
(9-4A) AXE0
(1-2A) HCLK1
(1-5A) NM4
12E
C11
C.C 220P
(1-5A) E/D
(1-5A) *E/D
OBJAB81 (14-1E)
(1-4A) *NM1
(1-4A) AXE1
13E
(1-4A) NM1
C10
+5
-38-

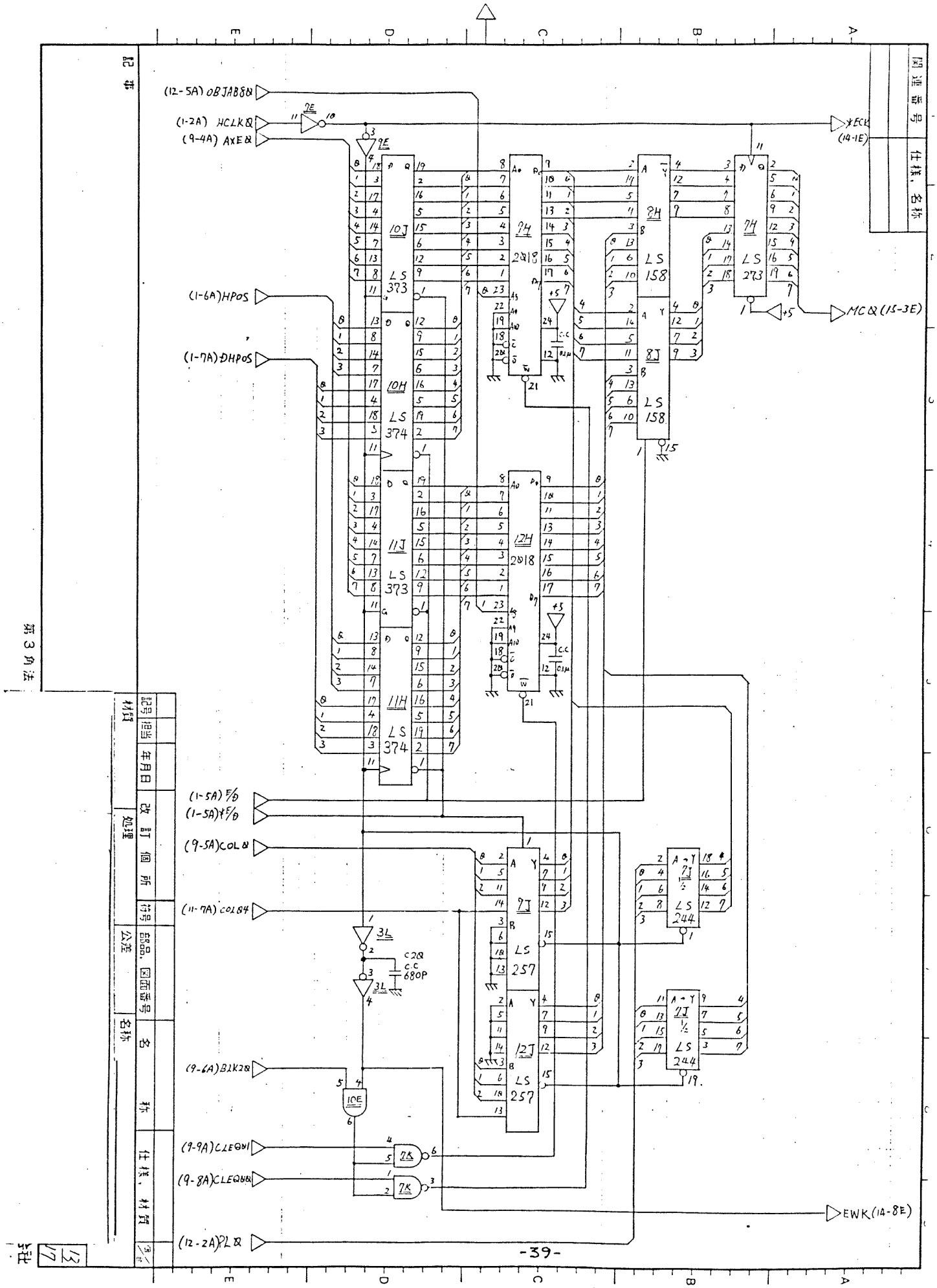
(12-5A) OBJABSX
(1-2A) HCLKX
(9-4A) AXEX
(1-6A) HPOS
(1-7A) DHPOS
(1-5A) E/D
(1-5A) ¥E/D
(9-5A) COLX
(11-7A) COLX4
(9-6A) B1K2X
(9-9A) CLEQX1
(9-8A) CLEQX4
(12-2A) PLX
*ECK (14-1E)
MCQ (15-3E)
EWK (14-8E)
10J LS 373
10H LS 374
11J LS 373
11H LS 374
9H 2818
12H 2818
9H LS 158
8J LS 158
7H LS 273
9J LS 257
12J LS 257
7J ½ LS 244
2J ½ LS 244
C28 C.C 680P
+5
C.C
0.1μ
関連番号
仕様，名称
記事
第3角法
材料
記号
担当
年月日
改訂個所
符号
部品，図面番号
名称
仕様，材質
処理
公差
-39-

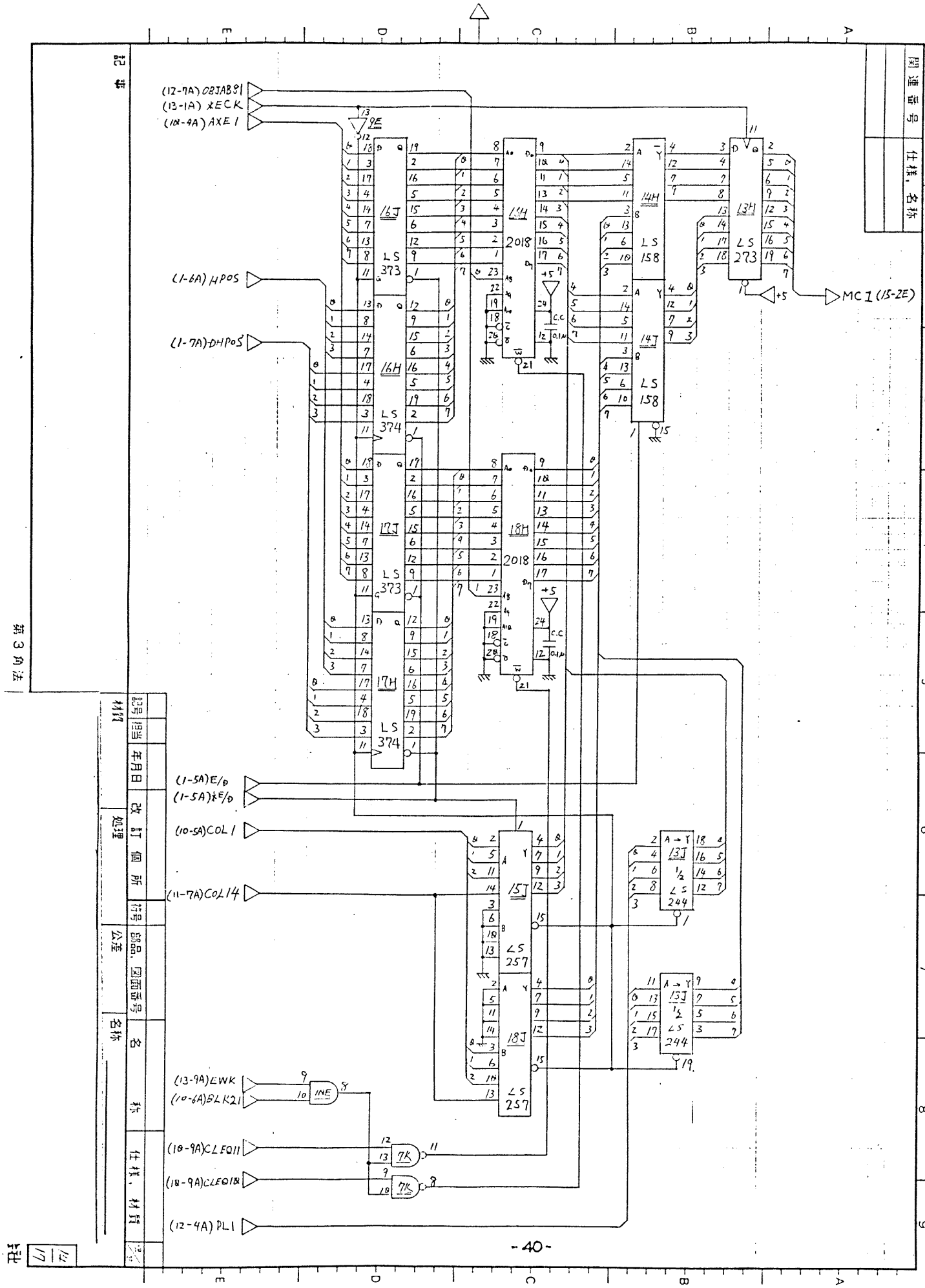
(12-7A) OBJAB91
(13-1A) XECK
(18-9A) AXE1
(1-6A) HPOS
(1-7A) DHPOS
(1-5A) E/D
(1-5A) XE/D
(10-5A) COL1
(11-7A) COL14
(13-9A) LWK
(10-6A) BLK21
(18-9A) CLFQ11
(18-9A) CLFQ18
(12-4A) PL1
MC1 (15-2E)
16J LS 373
16H LS 374
17J LS 373
17H LS 374
14H 2018
18H 2018
14H LS 158
14J LS 158
13H LS 273
15J LS 257
18J LS 257
13J 1/2 LS 244
13J 1/2 LS 244
1NE
7K
7K
+5
C.C
0.1μ
9E
記号
品名
年月日
改訂個所
符号
部品, 図面番号
名称
仕様, 材質
材質
処理
公差
名称
第3角法
-40-

関連番号	仕様，名称

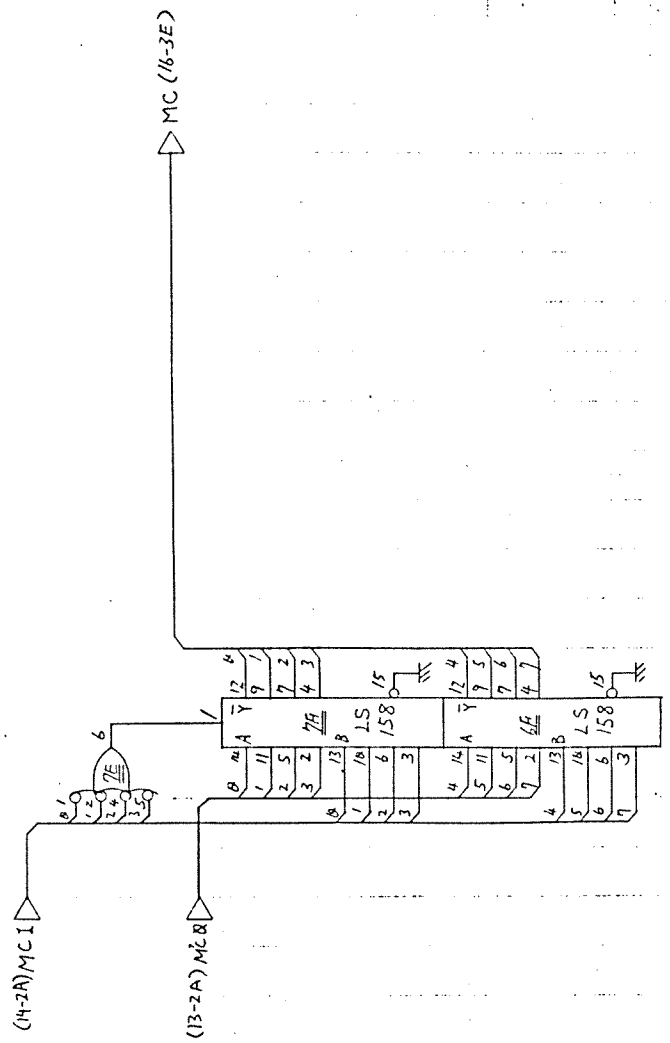

記号	担当	年月日	改訂個所	符号	部品，図面番号	名称	仕様，材質	数

材質	処理	公差	名称

記事

第3角法

15/17

-41-

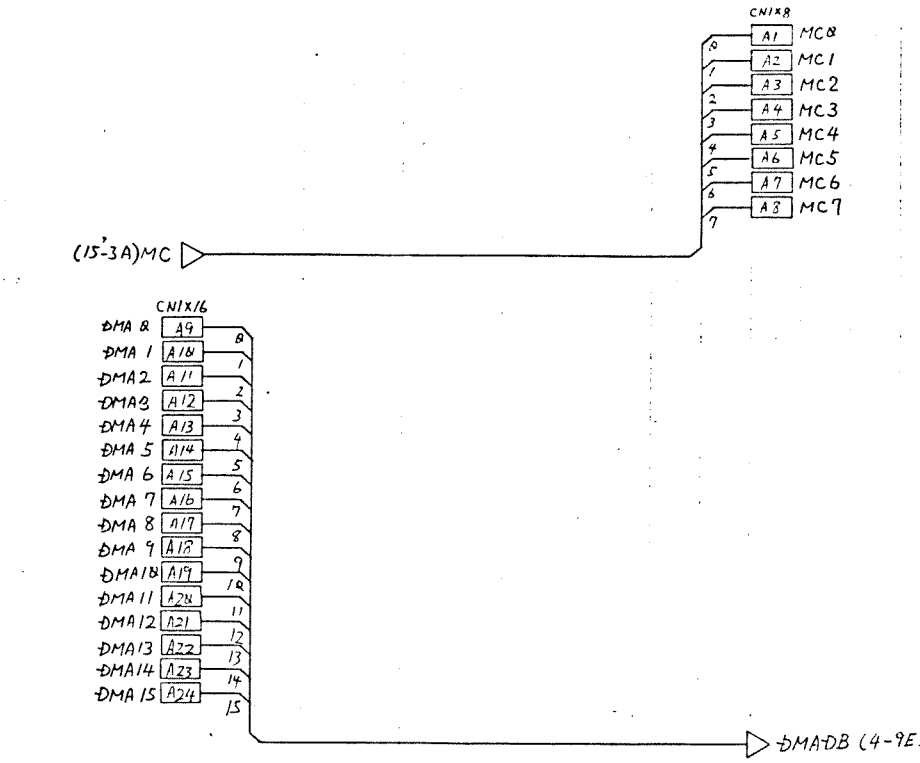

関連番号

仕様，名称

記事

第3角法

記号	担当	年月日	改訂個所	符号	部品，図面番号	名称	仕様，材質	数
材質		処理		公差		名称		

12/17

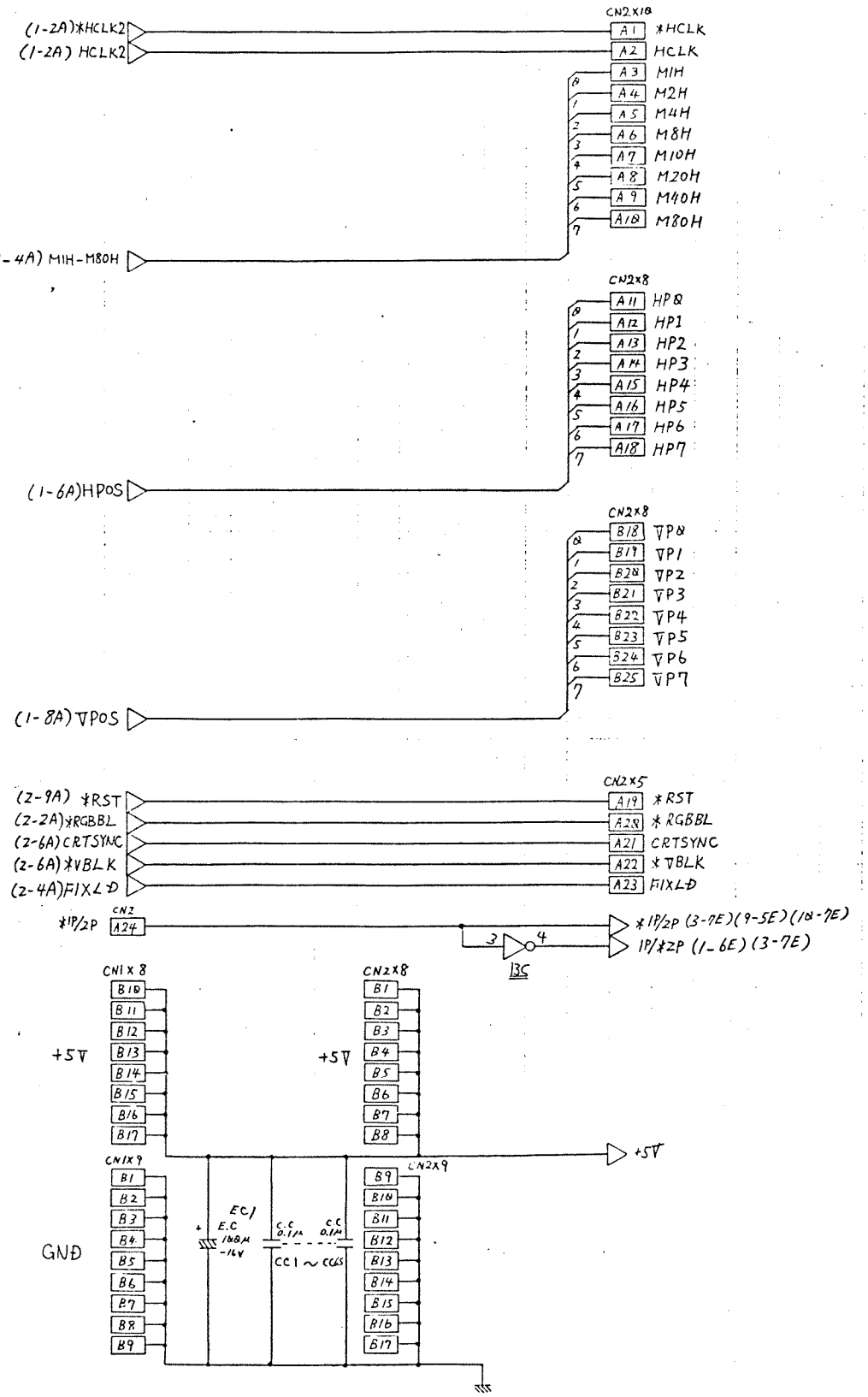

関連番号

仕様，名称

記事

第3角法

記号	担当	年月日	改訂個所	符号	部品，図面番号	名称	仕様，材質	数量
材質			処理		公差			

17/17