Reactor™

INSTRUCTION MANUAL

Gottlieb™
AMUSEMENT GAMES
165 W. Lake Street Northlake, IL 60164
(312) 562•7400 Telex 72•8463
A Columbia Pictures Industries Company

REACTOR #GV-100

INSTRUCTION MANUAL

ADDENDUM

1. PAGE #8, LAST LINE UNDER VOLTAGE SHOULD READ:

MONITOR AND MARQUEE: 100VAC or
115VAC, 60HZ.

2. PAGE #36, SERVICE PANEL ASSY.

ITEM	DESCRIPTION	PART NO.
1.	SERVICE PANEL ASSY.	MA-300
2.	CABLE ASSY.	MA-316
3.	SWITCH (PUSH BUTTON)	EL-57
4.	SWITCH (TOGGLE)	EL-85
5.	VOLUME CONTROL	XO-104
6.	COIN METER	EL-84

REACTOR (GAME GV-100)
INSTRUCTION MANUAL

SEC.		PAGE
I.	INSTALLATION	1
II.	INITIALIZATION	3
III.	GAME OPERATION	3
IV.	GAME PLAY AND SCORING	4
V.	SOUND/SPEECH	6
VI.	GAME ADJUSTMENTS/OPTIONS	6
VII.	BOOKKEEPING AND SELF TEST	7
VIII.	GENERAL INFORMATION	8
IX.	THEORY OF OPERATION	9
X.	WIRING AND SCHEMATIC DIAGRAMS	11
XI.	PARTS INFORMATION	33
	WELLS GARDNER MONITOR, SERVICE AND OPERATION MANUAL (Attached)	

FOR SERVICE, CALL TOLL FREE: 800-323-9121; (ILLINOIS) 800-942-1620

I. INSTALLATION

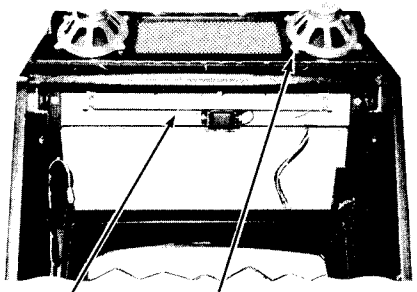

MA-298 ILLUMINATION ASSY.

MA-308 SPEAKER/MARQUEE ASSY.

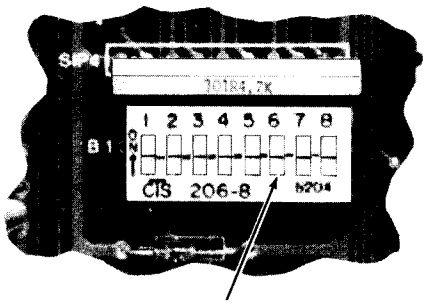

GAME ADJUSTMENT SWITCHES (PART OF A1 LOGIC BOARD)

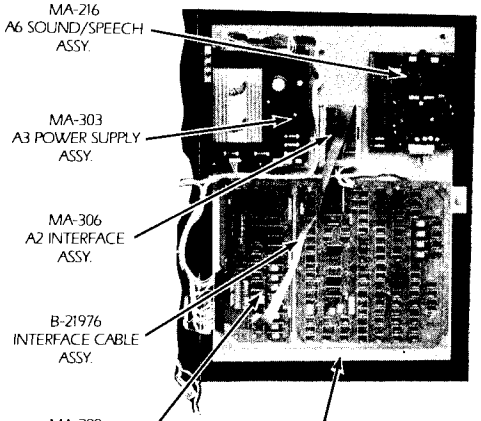

MA-216 A6 SOUND/SPEECH ASSY.

MA-303 A3 POWER SUPPLY ASSY.

MA-306 A2 INTERFACE ASSY.

B-21976 INTERFACE CABLE ASSY.

MA-289 A1 LOGIC BOARD ASSY.

MA-307 MASTER ELECTRONICS PANEL

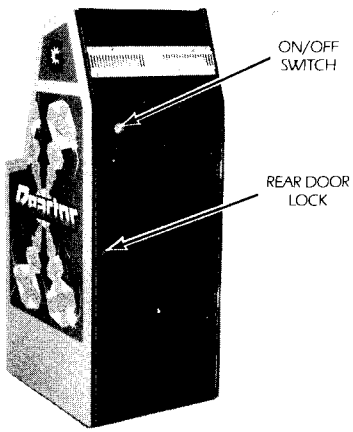

ON/OFF SWITCH

REAR DOOR LOCK

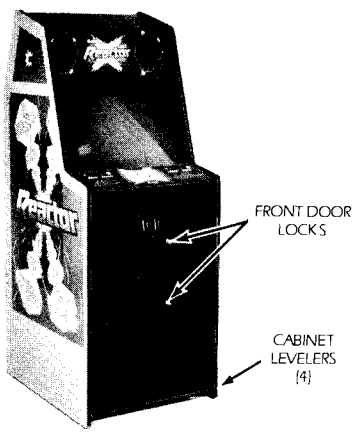

FRONT DOOR LOCKS

CABINET LEVELERS (4)

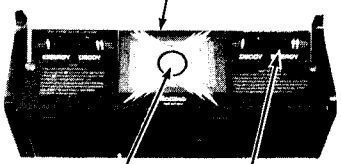

MA-305 CONTROL PANEL ASSY.

TRACK BALL

PLAYER SWITCHES (TYPICAL)

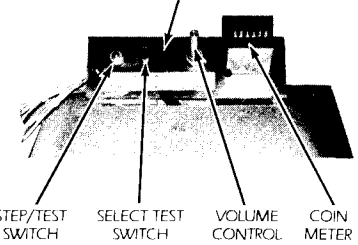

MA-300 SERVICE PANEL ASSY.

STEP/TEST SWITCH

SELECT TEST SWITCH

VOLUME CONTROL

COIN METER

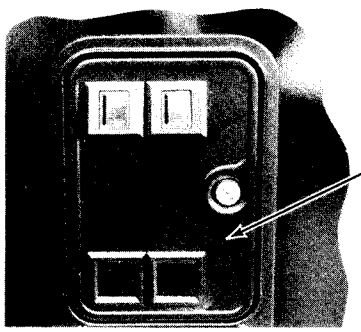

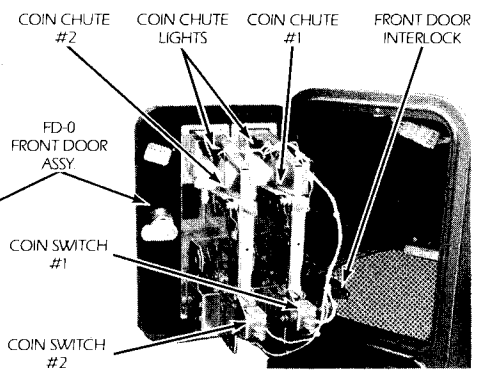

COIN CHUTE #2

COIN CHUTE LIGHTS

COIN CHUTE #1

FRONT DOOR INTERLOCK

FD-0 FRONT DOOR ASSY.

COIN SWITCH #1

COIN SWITCH #2

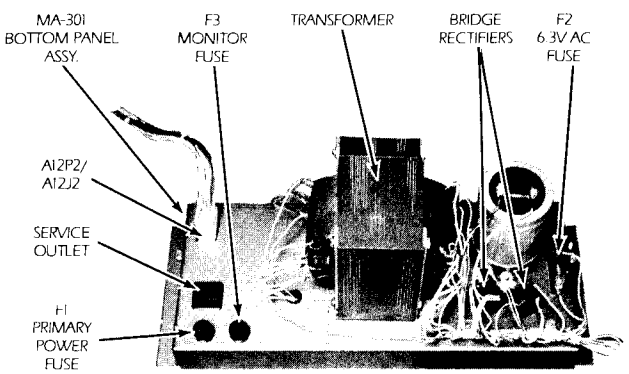

MA-301 BOTTOM PANEL ASSY.

F3 MONITOR FUSE

TRANSFORMER

BRIDGE RECTIFIERS

F2 6.3V AC FUSE

A12P2/ A12J2

SERVICE OUTLET

F1 PRIMARY POWER FUSE

I. INSTALLATION

A. SET—UP

1. Carefully inspect the exterior of the game for any damage which might have occurred during shipment.
2. Remove the two screws from the back door, that were used for extra security during shipping.
3. Unlock and open the rear cabinet door.
4. Check that all plug in connectors are seated firmly. The connectors are keyed so they will only go in one way.
5. Remove the binding strap from the line cord, and install the line cord plate in the groove provided (see photo).
6. Adjust the cabinet levelers as necessary.

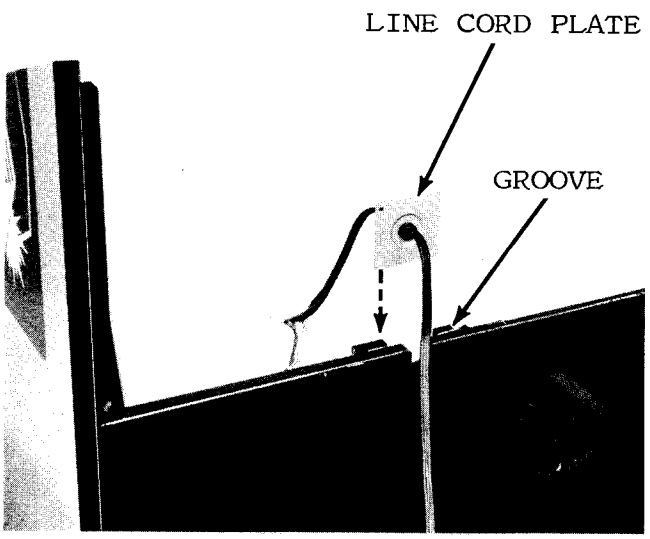

B. CHECK-OUT

1. Check that all cables are free of moving parts.
2. Check for any loose wires.
3. Check for loose solder or foreign matter on switches and power supply assemblies.
4. Be certain all fuses are seated firmly.
5. Be sure transformer wiring corresponds to the supply voltage.
6. Refer to section VI to make all the necessary game adjustments.
7. Reassemble the game.
8. Plug the line cord into a properly grounded 3-wire receptacle ONLY!!

C. CONTROL PANEL REMOVAL

1. Unplug the game.
2. Unlock and open the coin chute door.
3. Reach in through the coin chute door and remove the wing nut and flat washer from each of the two carriage bolts which secure the control panel to the game. Remove the carriage bolts.
4. Pull the control panel back, grasp it at the front edge as far back as it will go (approximately ¼").
5. Raise the front of the control panel approximately one inch above its supports and lift the entire assembly high enough to disconnect plugs A9J1/A9P1 and A9J2/A9P2.
6. Remove the entire control panel assembly from the game.
7. Track Ball assembly and leaf-switches are now accessible for removal or cleaning.

D. MONITOR REMOVAL

1. Unplug the game.
2. Perform the control panel assembly removal procedure (Section C).
3. Remove the outside shield, glass and monitor mask and put them aside in a secure place.
4. Unlock and open the rear cabinet door.
5. NOTE: The color monitor contains HIGH VOLTAGES delivering LETHAL quantities of energy. Do not attempt to service the monitor until you have shorted the anode plug on the picture tube to ground.
6. Disconnect the video plug A17J1, the monitor power supply plug A12J3/A12P3 and the ground wire from the monitor chassis.
7. From the rear of the game, remove the one unit and two washers from each of the four carriage bolts used to secure the monitor to the platform.
8. From the front of the game, remove the monitor, being careful to clear all cables from the CRT neck.
9. For reassembly, reverse the above procedure.

II. INITIALIZATION

TURN GAME ON

Immediately, all of the illumination lamps turn on. These include the control panel lamps, the coin chute lamps and the speaker marquee lamp.

AFTER A TEN SECOND DELAY

A. The attract mode appears on the screen.

B. The playing field cycles through the following:

1. Gottlieb logo
2. High Game to Date screen
3. Game Play

DEPRESSING ANY CONTROL BUTTON

The instruction set will now appear on the playing field and follow through game play and strategies.

III. GAME OPERATION

A. GAME START

1. Insert coins into coin chute.
   a. Coin chute tune is played.
   b. Total credits are displayed on screen.

2. Press one or two player button to start game.
   (3 ships/25¢ or 7 ships/50¢)

   a. Instructions are displayed on screen.
   b. Total credits are decreased by one.
   c. Game initializes.

B. FIRST PLAYER

1. The first player's score displays a zero.
2. The other player's display will be blank.
3. When the player loses his ship, any bonus earned is scored.

C. SECOND PLAYER

1. Additional player is indicated by a zero in the second player's display.

D. EXTRA SHIPS/DECOYS

1. Extra ships are earned (dependent on Switches #7 and #8) by achieving certain score levels.
2. Extra decoys are earned by knocking down both sets of control rods.

IV. GAME PLAY AND SCORING

HOW TO PLAY

The game activity starts with the player's ship contained within the heart of a nuclear reactor. The player moves his ship using a track ball, and has the use of a rapid fire energy button and a decoy button to protect himself.

During the game play, the core expands as the enemy particles attempt to destroy the player's ship by deflecting it against the kill wall. Simultaneously, the player must destroy the enemy particles by using his ship to deflect them against the kill wall.

Pushing the energy button (located on the control panel) when the player's ship is in contact with an enemy particle, will increase the force applied to both the player's ship and enemy particle. When the decoy button is pushed, a decoy will emerge from the player's ship. The decoy will remain stationary at the point where the ship was located when the button was pushed. The decoy confuses the enemy so that they attack the decoy instead of the player. The decoy cannot be destroyed and should be placed in one of three positions:

1. Next to a kill wall.
2. In front of the control rods.
3. Inside the entrance to the bonus chambers.

In doing so, the enemy particles will be lured into a position which will allow the player to:

1. Destroy them against a kill wall.
2. Destroy the control rods.
3. Trap them in the bonus chamber.

- Knocking down either set of control rods, with enemy particles, will reduce the size of the core.
- Knocking down both sets of control rods will add an extra decoy.
- After every 15,000 points, the player earns one extra ship. (Dependent on switches #7 and #8.)

While the enemy particles are in the bonus chambers, they will deflect off one another and the walls. As they are deflected off the walls, bonus is scored. To achieve maximum bonus, the player must use the ENERGY button to hold the enemy particles in the bonus chamber as long as possible.

The player earns 15 points per bounce during the early rounds and 15+ per bounce as the game progresses. On each round, point values per bounce increase.

As the play progresses, the reactor core continually grows in size, which decreases the usable playfield.

During the early rounds the core is a rectangular shape which expands outward forcing the player closer to the dangerous kill walls. The player can shrink the core by destroying either set of control rods, or killing the total amount of enemies "TO GO" for each round.

In later rounds the rectangular expanding core is replaced with an expanding and swirling vortex. Unlike the rectangular core, the vortex is deadly to the player. As it enlarges, it will draw the player to its center and destroy him. A skillful player can get out of the vortex even after it has caught him by moving his ship in a clockwise direction.

The ideal game play is a balance of using the decoys and bounce chambers to accumulate large bonus points, extra ships and using the control rods to gain extra decoys.

ROUND PROGRESSIONS

The following chart lists round progressions for Reactor:

Commencing with set three, the outer kill walls become invisible and remain that way for the rest of the game.

In set five and on (round 33), set four repeats itself, but the enemy particles gain more speed and mass, and are harder to kill. The control rods in each set, for the rest of the game will be nine.

IV. GAME PLAY AND SCORING

ROUND PROGRESSIONS

	ROUND	CORE	MAXIMUM ENEMIES ON SCREEN	"TO GO"	CONTROL RODS IN EACH SET
SET 1	1.	Expander	3 Positrons	12	3
	2.	Expander	4 Positrons	16	3
	3.	Expander	5 Positrons	20	5
	4.	Expander	3 Positrons, 1 Nucleon	24	5
	5.	Expander	2 Positrons, 2 Nucleons	32	5
	6.	Expander	3 Nucleons	36	5
	7.	Expander	2 Positrons, 1 Lepton	36	5
	8.	Expander	1 Lepton, 1 Nucleon	40	5
SET 2	9.	Vortex	3 Positrons	12	5
	10.	Vortex	4 Positrons	16	5
	11.	Vortex	5 Positrons	20	5
	12.	Vortex	3 Positrons, 1 Nucleon	24	5
	13.	Vortex	2 Positrons, 2 Nucleons	32	5
	14.	Vortex	3 Nucleons	36	5
	15.	Vortex	2 Positrons, 1 Lepton	36	5
	16.	Vortex	1 Lepton, 1 Nucleon	40	5
SET 3	17.	Expander	3 Pions	12	7
	18.	Expander	4 Pions	16	7
	19.	Expander	5 Pions	20	7
	20.	Expander	3 Pions, 1 Nucleon	24	7
	21.	Expander	2 Pions, 2 Nucleons	32	7
	22.	Expander	3 Nucleons	36	7
	23.	Expander	2 Pions, 1 Lepton	36	7
	24.	Expander	1 Lepton, 1 Nucleon	40	7
SET 4	25.	Vortex	3 Pions	12	7
	26.	Vortex	4 Pions	16	7
	27.	Vortex	5 Pions	20	7
	28.	Vortex	3 Pions, 1 Nucleon	24	7
	29.	Vortex	2 Pions, 2 Nucleons	32	7
	30.	Vortex	3 Nucleons	36	7
	31.	Vortex	2 Pions, 1 Lepton	36	7
	32.	Vortex	1 Lepton, 1 Nucleon	40	7

SCORING

UNUSED DECOYS
- Score 500 points

LEPTONS
- Score 400 points

NUCLEONS
- Score 200 points

NEUTRINOS
- Score 100 points

PIONS
- Score 75 points

POSITRONS
- Score 50 points

PHOTONS
- Do not score.

CONTROL RODS
- Score 50 points

BONUS CHAMBERS

Dependent on Switch #6

ON 15 or 15+
OFF 10 or 10+

- Scores 15 points (Rounds 1-4)
- Scores 16 points (Rounds 5-8)
- Scores 17 points (Rounds 9-12)
- Scores 18 Points (Rounds 13-16)
- Scores XX + 1 point every 4 rounds, etc. . .

CONTROL PANEL INSTRUCTIONS

RULES

- Track Ball controls player movements.
- Bounce enemies into outer wall to destroy them.
- Player will be destroyed by touching outer wall.
- Completing one target bank shrinks core.
- Completing both target banks wins one extra decoy.
- Knock enemy into bonus chamber for bonus points.
- Use ENERGY for more power to repel enemy.
- Use DECOY to distract enemy.

TACTICS

- Lure enemies close to outer wall for easier hits.
- Place decoy by outer wall for easier hits.
- Place decoy inside bonus chamber for big bonus, and be careful!
- Place decoy by target banks to earn more bonus and shrink core.
- Use early rounds to build up decoy reserves for later rounds.
- TO GO indicates number of enemies left in round.

V. SOUND/SPEECH

ATTRACT MODE

SPEECH	OCCURRENCE
"WARNING CORE UNSTABLE"	When core changes to vortex.

GAME MODE

SPEECH	OCCURRENCE
"WARNING CORE UNSTABLE"	When core changes to vortex.
"2000"	After 2000 bonus is accumulated.
"5000"	After 5000 bonus is accumulated.
"10,000"	After 10,000 bonus is accumulated.
"15,000-55,000"	Every 5000 increment is spoken through 55,000 points.
"40 TO GO"	When there are 40 enemy particles to go.
"32 TO GO"	When there are 32 enemy particles to go.
"24 TO GO"	When there are 24 enemy particles to go.
"16 TO GO"	When there are 16 enemy particles to go.
"8 TO GO"	When there are 8 enemy particles to go.
"ACTIVATE CHAMBER"	When entering BONUS CHAMBER for the first time.

VI. GAME ADJUSTMENTS/OPTIONS

A. CONTROL BOARD SWITCH ADJUSTMENT

SWITCH 1 — INITIATED ATTRACT MODE
ON ..... Sound and Instructions
OFF ..... Instructions/No Sound

SWITCH 2 — ATTRACT MODE
ON ..... Sound
OFF ..... No Sound

SWITCH 3 — GAME MODE
ON ..... Upright
OFF ..... Cocktail

SWITCH 4 — NORMAL/FREE
ON ..... Normal Game
OFF ..... Free Play

SWITCH 5 — CREDITS/COINS
ON 1/1
OFF 1/2

SWITCH 6 — BOUNCE CHAMBER
ON ..... 15 Points
OFF ..... 10 Points

SWITCHES 7 8 — FREE SHIPS
OFF OFF ..... Every 10,000 Points
ON OFF ..... Every 12,000 Points
ON ON ..... Every 15,000 Points
OFF ON ..... Every 20,000 Points

B. SOUND ADJUSTMENTS

The audio output is controlled by the potentiometer mounted on the service panel assembly (located inside the coin mechanism door).

Turning the potentiometer counter-clockwise will decrease the volume. Turning it clockwise will increase the volume.

IMPORTANT: Each of the potentiometers installed on the Sound/Speech board have been factory adjusted. The potentiometer settings should never be changed when performing the recommended calibration procedure.

C. MONITOR ADJUSTMENTS

Normally, few if any adjustments are required for proper monitor operation. However, after any major repairs to the monitor chassis refer to the attached monitor manual.

VII. BOOKKEEPING AND SELF TEST

BOOKKEEPING

The bookkeeping functions of Reactor (GV-100) are limited to the electro-mechanical coin counter located inside the front door. Every time a coin is inserted into a coin slot, the counter is energized.

SELF TEST

The self-test consists of six functions which may be used to identify problems in the video system and to change program parameters.

The self-test mode is entered by setting the self-test toggle switch located inside the cash door to "TEST". A selection of available tests is displayed on the monitor. To return to the GAME mode at any time, the operator needs only to set the toggle switch back to "GAME".

Selection of tests is done with the push button switch labeled "SELECT". Upon entering the test mode, a flashing arrow points to the first test selection momentarily, depresssing the "SELECT" button will advance through each selection one by one.

When the arrow is pointing to the desired test, the operator may begin that test by pressing the "SELECT" button and holding it down until the test appears on the screen.

Once a test has been selected, the operator can return to the selection list by holding down the select switch until it re-appears. The six tests are as follows:

1. MONITOR ADJUSTMENT

Four patterns can be displayed on the screen for adjusting monitor color, brightness, contrast and convergence. The patterns are: Color bars, a cross-hatch, a gray scale, and a dot pattern. By momentarily pressing the select switch, the operator may cycle through the four patterns.

2. MEMORY

For each RAM memory chip; a green check (✓) or red (x) appears signaling that the chip is good or bad respectively.

For each ROM memory chip, a check sum is displayed. If you have a suspect ROM, refer to your distributor for the correct check sum number.

3. SWITCHES/LAMPS

A colored square is displayed for each player button. Pressing a button causes the appropriate square to change color. For each mechanism, a digit is displayed (initially 0). Inserting a coin into a coin chute will increment the appropriate value without affecting the coin meter.

Each player button contains a lamp. During this test, the lamps are turned on and off in various combinations. This happens independent of any button pressing or coin switch testing. When a lamp is lit, a picture of a light bulb appears on the screen under the appropriate colored square. By making sure the buttons are lit according to the light bulbs shown on the screen, this will determine whether or not the lamps are working properly.

4. OBJECT PRIORITY

Visual inspection must be used to determine the priority of two or more objects occupying the same area of the screen; that is, which objects appear to be in front of others and which are behind.

A total of 62 identical objects are placed on the screen in 4 rows. Each object overlaps another such that the first object appears to be in front, and succeeding objects appear to be placed behind all previous ones. When this display is completed, the procedure is repeated such that each new object appears to be in front of all the previous ones.

5. TRACK BALL

This test allows the operator to align the track ball and check for slippage.

A figure which can be moved by the track ball is placed on a grid. Movement of the figure is scaled down so that the track ball must be spun fairly rapidly to have the figure move an appreciable distance.

The two digit number indicated on the left side of the screen is the absolute value of the difference between the horizontal and vertical distances moved. When the track ball is spun rapidly at a 45° angle, this number should be close to zero.

6. DIP SWITCHES

A functional description of the eight Dip Switches located on the Logic Board Assy. is displayed. Changing any switch will cause an immediate update of the description displayed on the screen.

VIII. GENERAL INFORMATION

A. PRINTED CIRCUIT BOARDS ARE DESIGNATED AS FOLLOWS:

A1 Logic Board Assy.

A2 Interface Assy.

A3 Power Supply Assy.

A6 Sound/Speech Assy.

B. WIRE COLORS ARE SHOWN AS NUMBERS:

0 Black	5 Green
1 Brown	6 Blue
2 Red	7 Purple
3 Orange	8 Slate
4 Yellow	9 White

For example, 688 is a BLUE- SLATE-SLATE striped wire.

C. FUSES

BOTTOM PANEL

F1	Primary Power	4-Amp SLO-BLO
F2	6.3 VAC	3-Amp SLO-BLO
F3	Monitor	2 Amp SLO-BLO

POWER SUPPLY ASSY. (A3)

F11	+5VDC Source		5 Amp SLO-BLO
F21	Sound/Speech Assy.	+30VDC	1½ Amp SLO-BLO
F31	Sound/Speech Assy.	+12VDC	¼ Amp
F32	Sound/Speech Assy.	-12VDC	¼ Amp
F41	Coin Meter	+20VDC	1 Amp SLO-BLO

POWER SUPPLY SPECIFICATIONS

LOCATION	VOLTAGE	PROTECTION
Logic Board Assy.	+5VDC	Voltage adjustable. 6Amps over-voltage protection and fused for over-current protection.
Sound/Speech Board	+30VDC	1.5Amps fused for over-current protection. The reference for this circuit is a 1N5363 +30VDC Zener controlling the base of an emitter follower pass transistor.
Sound/Speech Board	+12VDC -12VDC	100 milliamps fused for over-current protection. The plus and minus 12 volts supplies are the 7812 and 7912 IC regulators respectively.
Coin Meter	+20VDC	Full wave rectified unfiltered voltage, fused for over-current protection.
Coin Chute Lights	+4.5VDC	Full wave rectified unfiltered voltage, fused for over-current protection.
Monitor and Marquee	100VAC or 1115VAC, 60HZ	Isolated, fused AC voltage.

IX. THEORY OF OPERATION

INTRODUCTION

The character based graphics system designated GG-II has two main subdivisions. The first subdivision is the Central Processor Unit (CPU) which has three partitions:

a. Microprocessors
b. Memory
c. Input and Output ports (I/O)

The Intel 8088 microprocessor is used and 32K bytes of memory is reserved for programming space and has 5 input ports and 5 output ports. The second subdivision is the video state machine which generates and controls the video signal to the monitor. The state machine has three partitions:

a. System Clock (CLK)
b. Foreground generator (FGND)
c. Background generator (BGND)

The system clock is driven by a 20MHZ crystal, divided down for a 5MHZ dot clock.

All inputs and outputs including the video control and general purpose I/O are memory-mapped, (i.e. everything within the system can be addressed in a single segment of 64K addresses as memory).

The video control unit is divided into an "object-oriented" foreground driver and "character-oriented" background driver. The screen resolution is 256 pixels horizontally, and 240 lines vertically for both foreground and background. The CPU communicates with the foreground driver and background driver by writing data into the designated memory areas in a certain format. The foreground is designed to display moving objects on the screen with a minimum overhead to the processor. The game programs will only have to specify the vertical and horizontal position and the object select number to the foreground driver. The background video supplements the foreground with relatively static figures on the screen. The CPU specifies all the character positions on the screen with desired "character " patterns.

A 5MHZ system clock drives a 9 bit horizontal dot counter and an 8 bit vertical line counter. The horizontal counter counts from 0 to 255 during active scan line and 256 to 317 during horizontal blanking time. When the horizontal counter reaches 317, the horizontal counter resets to 0. At the beginning of the horizontal blanking time (horizontal counter = 256) it increments the vertical counter. The vertical counter counts from 0 to 239 during active vertical scan time and 240 to 255 during vertical blanking time.

X. WIRING AND SCHEMATIC DIAGRAMS, PARTS LISTS

TABLE OF CONTENTS

PAGE

LOGIC BOARD ASSY. (A1)
- COMPONENT LOCATION AND PARTS LIST 12
- SCHEMATIC DIAGRAM (SHEET 1 OF 3) 15
- SCHEMATIC DIAGRAM (SHEET 2 OF 3) 17
- SCHEMATIC DIAGRAM (SHEET 3 OF 3) 19

INTERFACE ASSY. (A2)
- COMPONENT LOCATION AND PARTS LIST 21
- SCHEMATIC DIAGRAM 22

POWER SUPPLY ASSY. (A3)
- COMPONENT LOCATION AND PARTS LIST 24
- SCHEMATIC DIAGRAM 25

SOUND/SPEECH ASSY. (A6)
- COMPONENT LOCATION AND PARTS LIST 27
- SCHEMATIC DIAGRAM 28

PRIMARY POWER/INTERCONNECTION DIAGRAM 30

X. WIRING AND SCHEMATIC DIAGRAMS, PARTS LISTS

LOGIC BOARD ASSY. (A1), PARTS LIST

INTEGRATED CIRCUITS

REFERENCE	DESCRIPTION	PART NO.
	Logic Board Assy.	MA-289
A1	8284A Clock Driver	XO-478
A2	74LS02 Quad 2-input "NOR" gate	XO-428
A3	74LS161 Synchronous Presettable binary counter	XO-440
A8, A9, A10	74LS377 Octal "D" Flip flop	XO-97
B1	8088 CPU	XO-490
B3	74LS374 Octal D-type flip flop	XO-96
B4	74LS367 Hex 3-state buffer	XO-444
B5	Expansion	
B6	74LS138 1 of 8 Decoder/Demultiplier	XO-437
B7	74LS139 Dual 1 of 4 decoder	XO-419
B8, B9, B10	74LS138 1 of 8 decoder	XO-437
B11, B12	74LS240 Octal Buffer/line driver	XO-91
B14	74LS240 Octal Buffer/line driver	XO-91
C3	74LS374 Octal D-type flip flop	XO-96
C4	74LS245 Octal Bus transceiver	XO-79
C5	8128 (RAM 0)	XO-486
C6	8128 (RAM 1)	XO-486
C7, C8-9	Expansion	
C9-10	ROM 7 (2732A) 4K · 8 EPROM	XO-485
C10-11	ROM 6 (2732A) 4K · 8 EPROM	XO-485
C11-12	ROM 5 (2732A) 4K · 8 EPROM	XO-485
C12-13	ROM 4 (2732A) 4K · 8 EPROM	XO-485
C13-14	ROM 3 (2732A) 4K · 8 EPROM	XO-485
C14-15	ROM 2 (2732A) 4K · 8 EPROM	XO-485
C15-16	ROM 1 (2732A) 4K · 8 EPROM	XO-485
C17	ROM 0 (2732A) 4K · 8 EPROM	XO-485
D1	74LS13 9	XO-419
D2, D5, D6,D7, D8, D9, D10, D13	74LS157 Quad 2-input multiplexer	XO-390
D3, D4	74157 Quad 2-input multiplexer	XO-114
D11	74LS374 Octal D-type flip flop	XO-96
D12	74LS244 Octal Buffer/line Driver	XO-117
D15	74LS86 Quad 2-input exclusive-"OR" gate	XO-435
D16	74LS283 4-bit binary full adder	XO-95
D17	74S161 Synchronous presettable binary counter	XO-488
E1-2, E2-3, E4	93419 64 · 9 bipolar RAM	XO-99
E5	74LS283 4-bit binary full adder	XO-95
E6	74LS30 8-input "NAND"	XO-432
E7	4118 1K · 8 RAM	XO-487
E8, E9-10	74LS245 Octal Bus transceiver	XO-79
E10-11	4118 1K · 8 RAM	XO-487
E11-12	8128 (BG0) Static RAM 2K · 8	XO-486
E13	8128 (BG1) Static RAM 2K · 8	XO-486
E15	74LS86 Quad 2-input exclusive-"OR" gate	XO-435
E16	74LS273 8-bit register	XO-94
E17	74LS20 Dual 4-input "NAND" gate	XO-430
F5	74LS283 4-bit binary full adder	XO-95
F6	74LS32 Quad 2-input "OR" gate	XO-433
F15	74LS04 Hex inverter	XO-418
F16	74S161 Synchronous presettable binary counter	XO-488
F17	74LS86 Quad 2-input exclusive "OR" gate	XO-435
G1, G2, G3, G4, G5	74LS157 Quad 2-input multiplexer	XO-390
G7	74157 Quad 2-input multiplexer	XO-114
G8	74LS74 Dual D-type Pos. edge trig. flip flop	XO-431
G6	74LS161 Sync. presettable binary counter	XO-440
G9	74S157 Quad 2-input multiplexer	XO-124
G10	74LS245 Octal bus transceiver	XO-79
G11	74LS374 Octal D-type flip flop	XO-96
G12	74LS157 Quad 2-input multiplexer	XO-390
G13, G14, G15	7489 64-bit RAM	XO-88
G16, G17	74LS174 Hex D flip flop	XO-442
H1, H2, H3, H4	74S189 64-bit RAM	XO-89
H5, H6,	74S161 Synchronous presettable binary counter	XO-488
H7, H8, H9, H10	74LS157 Quad 2-input multiplexer	XO-390
H11	74LS260 Dual 5-input "NOR" gate	XO-93
H12	74LS298 Quad 2-port register	XO-118
H13	74LS157 Quad 2-input multiplexer	XO-390
H14	74LS00 Quad 2-input "NAND" gate	XO-427
H15	74LS30 8 input "NAND" gate	XO-432
H16, H17	74LS86 Dual 2-input exclusive "OR" gate	XO-435
J1, J2, J3, J4, J5, J6	74S189 64-bit RAM	XO-89
J7	74LS04 Hex inverter	XO-418
J8	74LS32 Quad 2-input "OR" gate	XO-433
J9	7408 Quad 2-input "AND" gate	XO-404
J10, J11	93422 256 · 2 bipolar RAM	XO-100
J12	74LS02 Quad 2-input "NOR" gate	XO-428
J13	74LS74 Dual D-type flip flop	XO-434
J14	7407 Hex buffer/driver	XO-126
J15	74LS30 8 input "NAND" gate	XO-432
J16, J17	74S161 Synchronous presettable binary counter	XO-488
K1, K2, K3	74LS379 Quad parallel register	XO-98
K4-5	FG0 2732A 4K · 8 EPROM	XO-485
K5-6	FG1 2732A 4K · 8 EPROM	XO-485
K6-7	FG2 2732A 4K · 8 EPROM	XO-485
K7-8	FG3 2732A 4K · 8 EPROM	XO-485
K9, K10, K11	74LS157 Quad 2-input multiplexer	XO-390
K12	74LS260 Dual 5-input "NOR" gate	XO-93
K13	74LS32 Quad 2-input "OR" gate	XO-433
K14	74LS08 Quad 2-input "AND" gate	XO-86
K15	74LS04 Hex inverter	XO-418
K16	74LS20 Dual 4-input "NAND" gate	XO-430
K17	74S161 Synchronous presettable binary counter	XO-488
L4-5, L5-6		
L6-7, L7-8	74LS166 8-bit shift register	XO-391
L11	74LS20 Dual 4-input "NAND" gate	XO-430
L12	74LS161 Synchronous presettable binary counter	XO-440
L13	74S74 Dual D-type pos. edge trig. flip flop	XO-87
L13-14	74S04 Hex inverter	XO-400

LOGIC BOARD ASSY. (A1), PARTS LIST (CONT.)

MISCELLANEOUS ELECTRONIC COMPONENTS

REFERENCE	DESCRIPTION	PART NO.
C1-16	Capacitor, 0.1 UF 50V AX. CR. +80%-20%	XO-230
C25	Capacitor, 10 UF 25V AX. TANT. 10%	XO-127
C31-C34	Capacitor, 0.1 UF AX. CR. +80%-20%	XO-230
C51	Capacitor, 100 PF 100V DIS. CR. 10%	XO-128
C52	Capacitor, 0.1 UF 100V DIS. CR. 10%	XO-626
ALL UNMARKED CAPACITORS	.01 UF 50V AX. CR. +80%-20%	XO-229
ALL POLARIZED UNMARKED CAPACITORS	10 UF 25V AX. TANT. 10%	XO-127
D1, D81	Diode, 1N4148	XO-261
Q1-Q4	Transistor, 2N6044	XO-120
Q81-Q87	Transistor, MPSA70	XO-309
R1, R16	Resistor, 470 OHM, 5% ¼W	XO-35
R31, R34	Resistor, 1K OHM, 5% ¼W	XO-5
R41, R42	Resistor, 510 OHM, 5% ¼W	XO-25*
R43	Resistor, 3.3K OHM, 5% ¼W	XO-38
R44, R45	Resistor, 1K OHM, 5% ¼W	XO-5
R51, R52	Resistor, 330 OHM, 5% ¼W	XO-34
R53, R56	Resistor, 1K OHM, 5% ¼W	XO-5
R57, R58	Resistor, 560 OHM, 5% ¼W	XO-36
R59-R62	Resistor, 1K OHM, 5% ¼W	XO-5
R69-R71	Resistor, 1K OHM, 5% ¼W	XO-5
R73, R74	Resistor, 1K OHM, 5% ¼W	XO-5
R76-R80	Resistor, 1K OHM, 5% ¼W	XO-5
R81	Resistor, 820 OHM, 5% ¼W	XO-174
R82	Resistor, 100 OHM, 5% ¼W	XO-28
R83, R84	Resistor, 15 OHM, 5% ¼W	XO-171
R85	Resistor, 180 OHM, 5% ¼W	XO-24
R86, R87	Resistor, 15 OHM, 5% ¼W	XO-171
R88	Resistor, 180 OHM, 5% ¼W	XO-24
R89, R90	Resistor, 15 OHM, 5% ¼W	XO-171
R91	Resistor, 180 OHM, 5% ¼W	XO-24
R92	Resistor, 1K OHM, 5% ¼W	XO-5
R93	Resistor, 2K OHM, 5% ¼W	XO-14
R94	Resistor, 1K OHM, 5% ¼W	XO-5
R95	Resistor, 470 OHM, 5% ¼W	XO-35
R96	Resistor, 240 OHM, 5% ¼W	XO-173
R97	Resistor, 2K OHM, 5% ¼W	XO-14
R98	Resistor, 1K OHM, 5% ¼W	XO-5
R99	Resistor, 470 OHM, 5% ¼W	XO-35
R100	Resistor, 240 OHM, 5% ¼W	XO-173
R101	Resistor, 2K OHM, 5% ¼W	XO-14
R102	Resistor, 1K OHM, 5% ¼W	XO-5
R103	Resistor, 470 OHM, 5% ¼W	XO-35
R104	Resistor, 240 OHM, 5% ¼W	XO-173
SIP 1, SIP 2 SIP 71, SIP 72 SIP 73	Resistor, Dip, 1K, 9 Pin	XO-493
SIP 4	Resistor, Dip, 4.7K, 9 Pin	XO-492
X-TAL 1	Crystal, 15 MHZ	XO-482
XTAL 51	Crystal, 20 MHZ	XO-494
	Dip Switch	XO-505
	20 Pin Socket	XO-491
	22 Pin Dip Socket	XO-467
	24 Pin Dip Socket	XO-529
	28 Pin Dip Cocket	XO-536
	40 Pin Dip Socket	XO-530

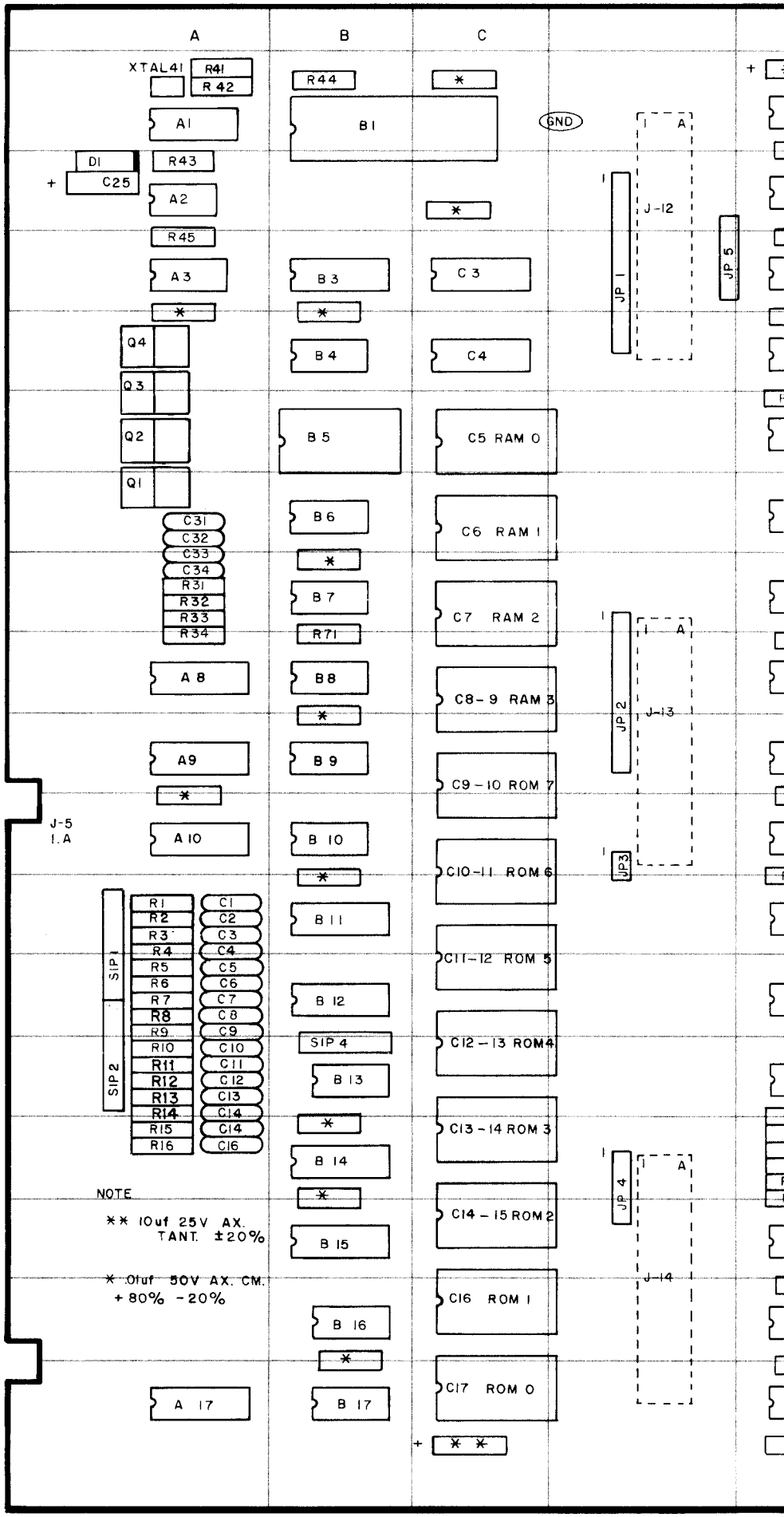

IC DIAGRAMS, PARTS LISTS

OARD ASSY. (A1), COMPONENT LOCATION

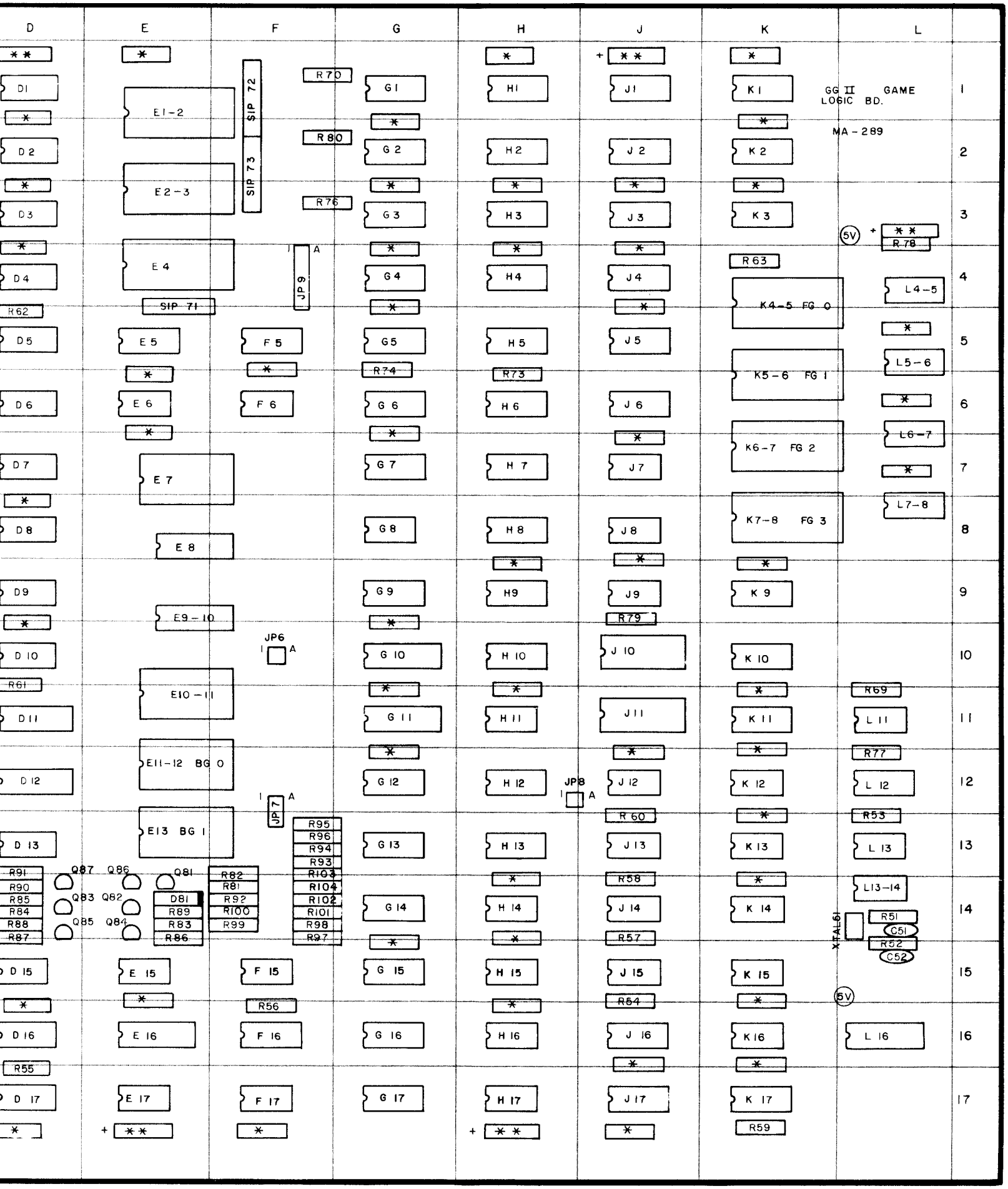

X. WIRING AND SCHEMATI

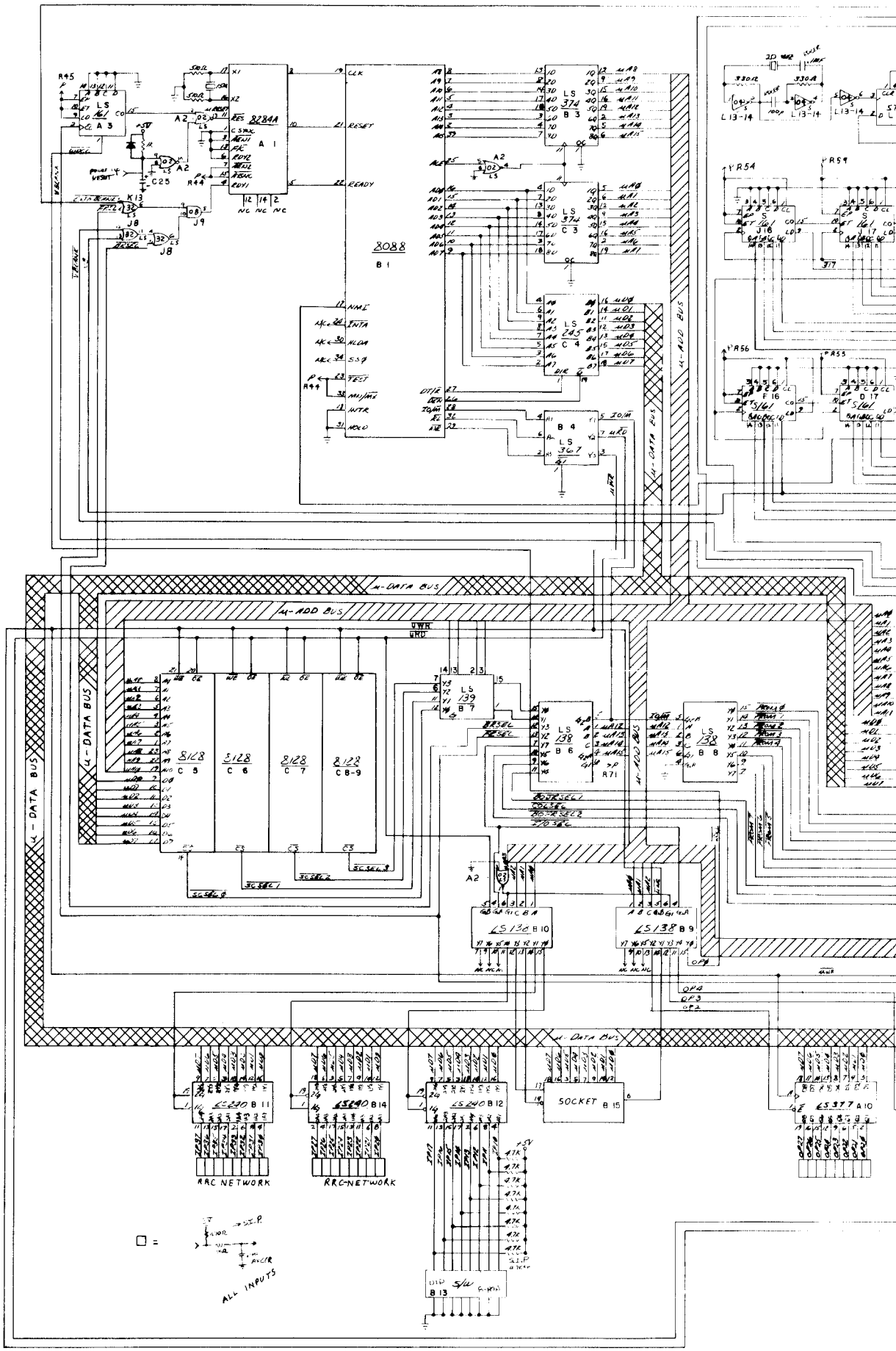

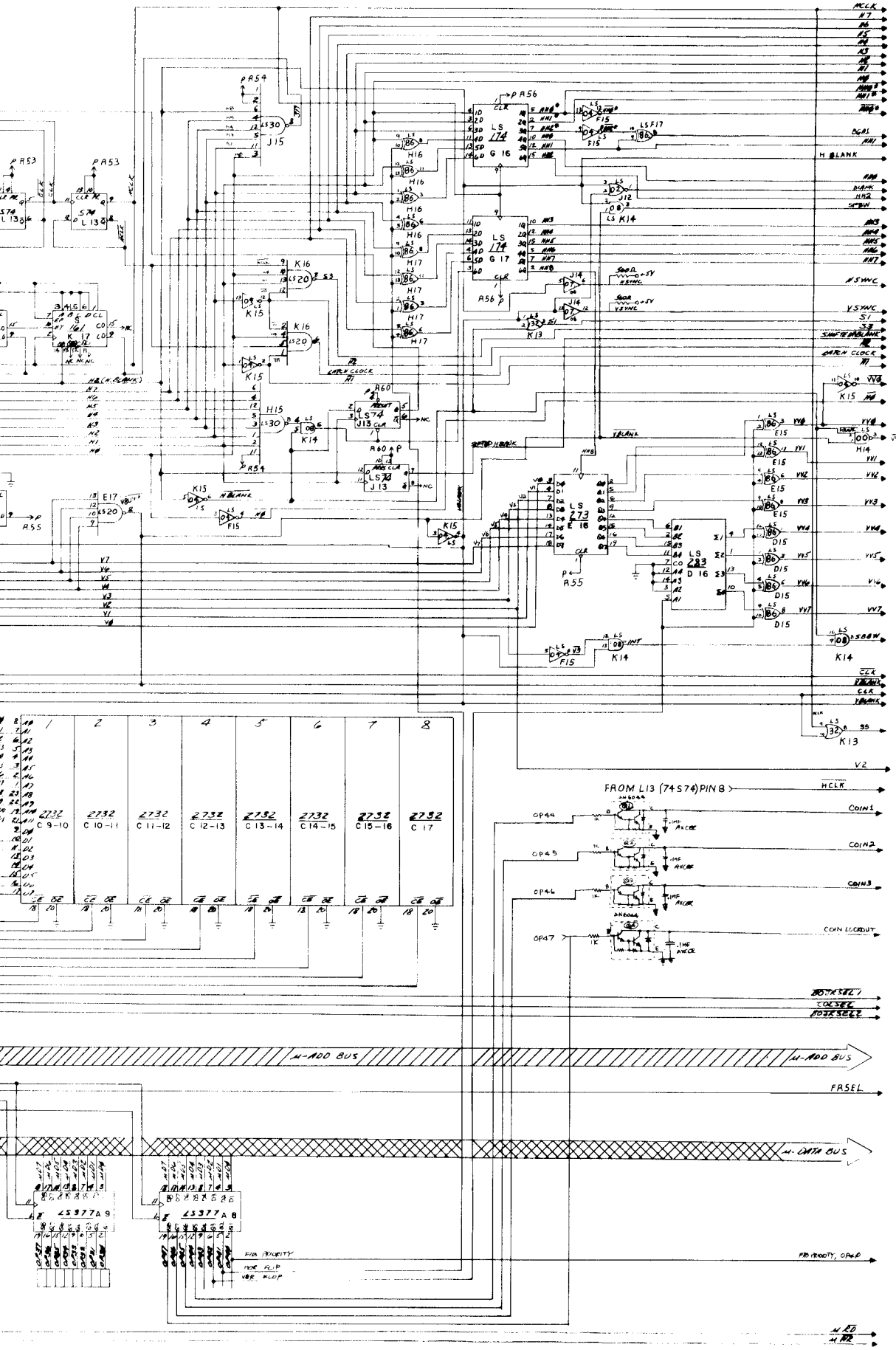

LOGIC BOARD ASSY. (A1), SCHEMATIC DIAGRAM, SHEET 1 OF 3

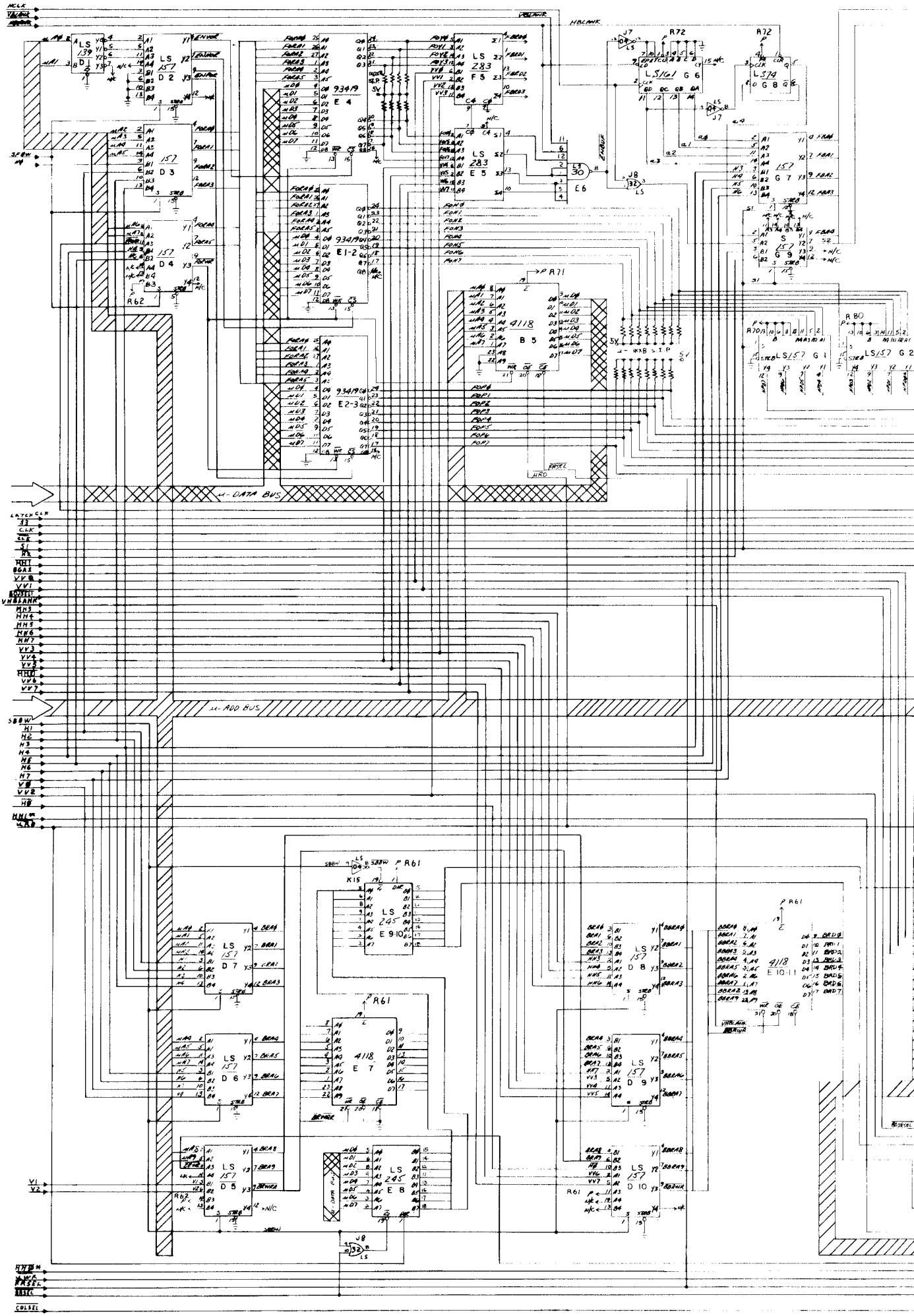
HCLK
VCLOCK
HBLANK
VBLANK
SFBW
LS 139 D1
LS 157 D2
LS 157 D3
LS 157 D4
R62
9341/9 E4
934/9041 E1-2
934/9041 E2-3
LS 283 F5
LS 283 E5
LS 30 E6
J7
R72
LS161 G6
LS74 G8
LS157 G7
LS157 G9
LS157 G1
LS157 G2
R71
4118 B5
5K 4-RES SIP
R80
R70
MA1 MA2 MA3 MA4
MI1 MI2 MI3 MI4
μ-DATA BUS
μ-ADD BUS
LATCH CLK
SS
CLK
OE
SI
MH1
BGA1
VH0
VH1
VBLANK
MH3
MH4
MH5
MH6
MH7
VV3
VV4
VV5
MH0
VV6
VV7
SBBW
H1
H2
H3
H4
H5
H6
H7
V0
VV2
H8
MH1
MA0
V1
V2
MWA
PIXSEL
BLKC
COLSEL
R61
K15
LS 245 E9-10
4118 E7
LS 245 E8
LS 157 D5
LS 157 D6
LS 157 D7
LS 157 D8
LS 157 D9
LS 157 D10
4118 E10-11
J8
BRAM
BRWE

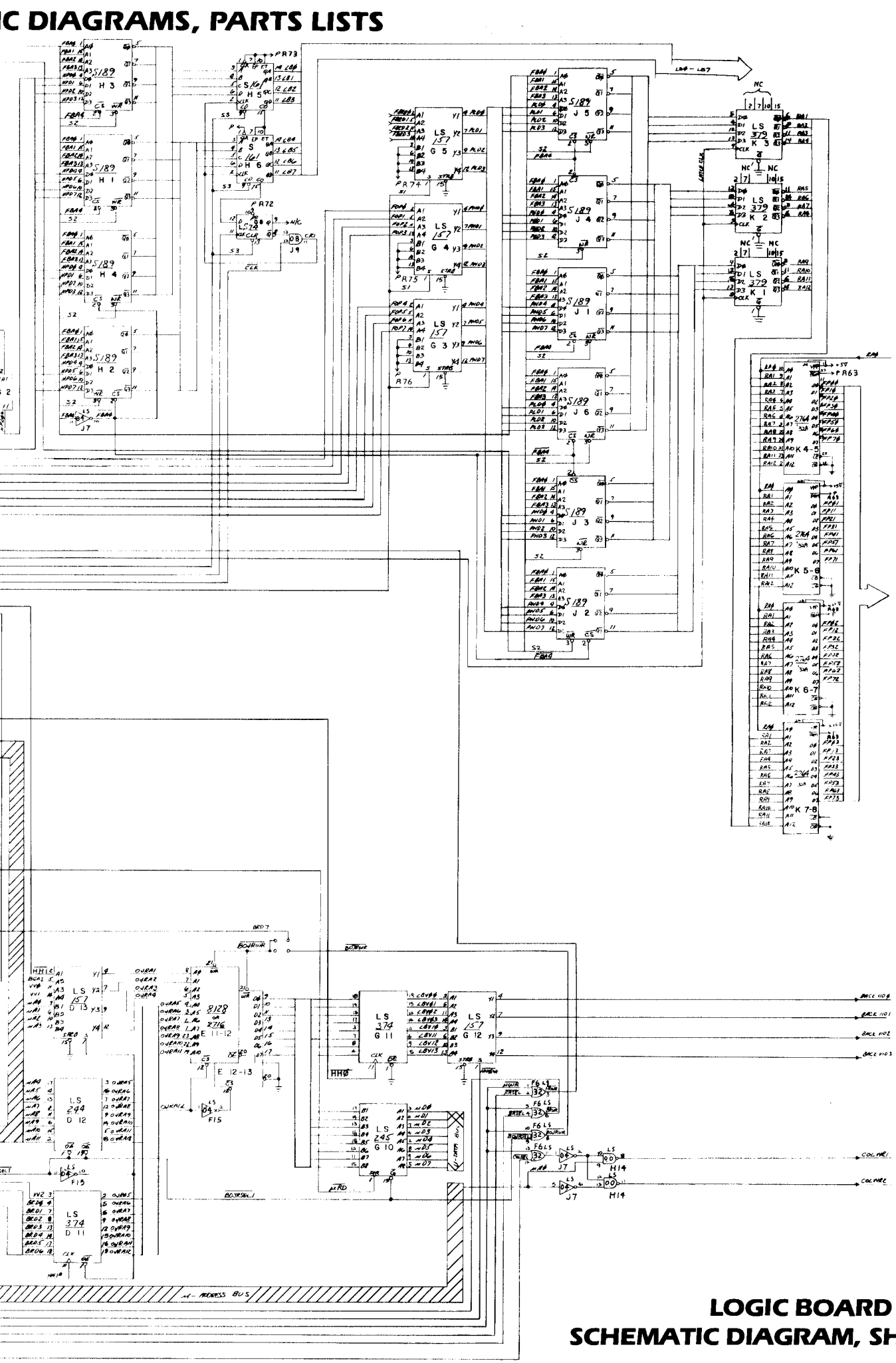

LOGIC BOARD ASSY. (A1),
SCHEMATIC DIAGRAM, SHEET 2 OF 3

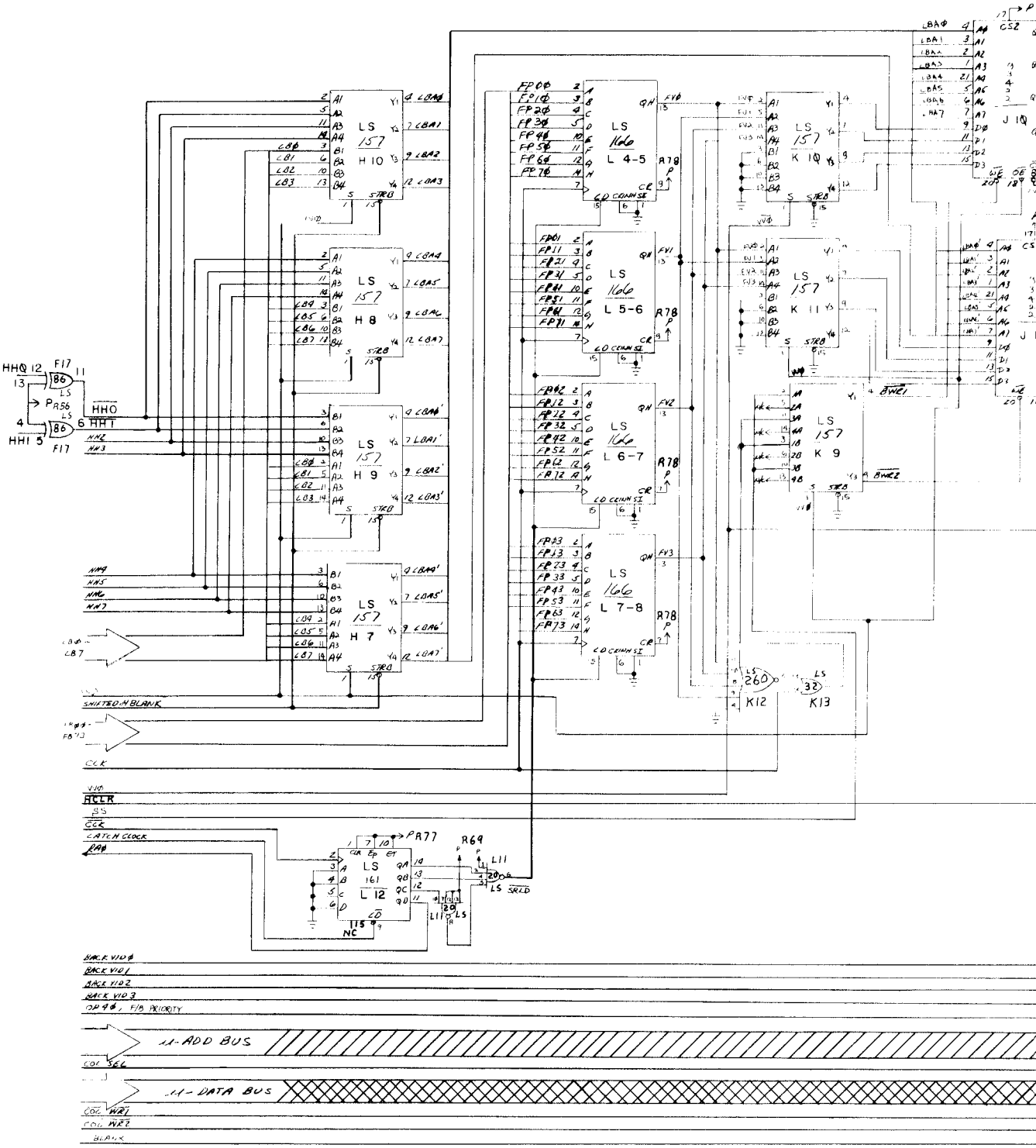
LS 157 H 10
LS 157 H 8
LS 157 H 9
LS 157 H 7
LS 166 L 4-5
LS 166 L 5-6
LS 166 L 6-7
LS 166 L 7-8
LS 157 K 10
LS 157 K 11
LS 157 K 9
LS 260 K12
LS 32 K13
LS 161 L 12
HHQ
HHT
HHI
SHIFTED H BLANK
CLK
HCLR
CCK
CATCH CLOCK
BACK VID 0
BACK VID 1
BACK VID 2
BACK VID 3
11-ADD BUS
11-DATA BUS

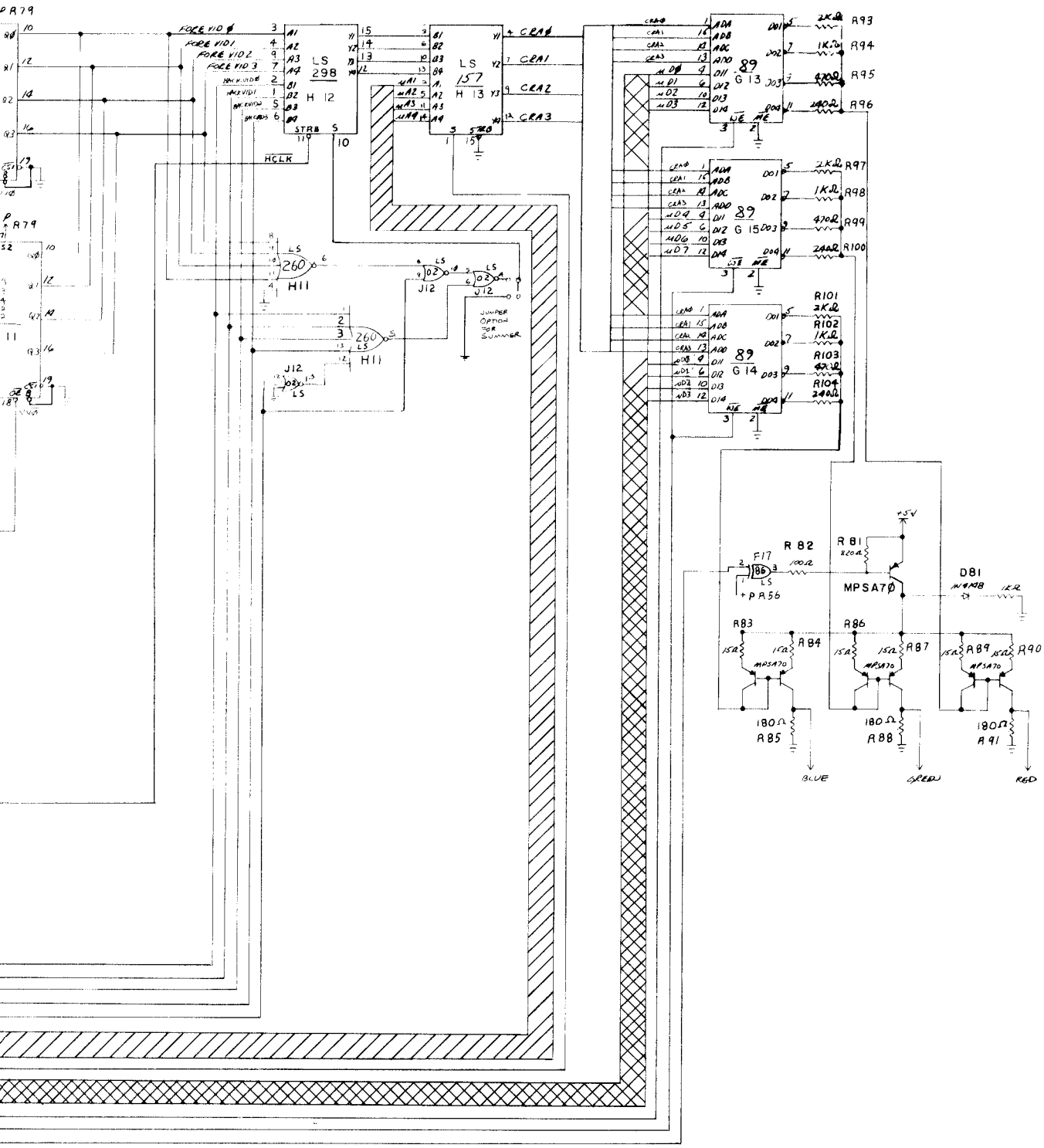

LOGIC BOARD ASSY. (A1), SCHEMATIC DIAGRAM, SHEET 3 OF 3

X. WIRING AND SCHEMATIC DIAGRAMS, PARTS LISTS

INTERFACE ASSY. (A2), COMPONENT LOCATION

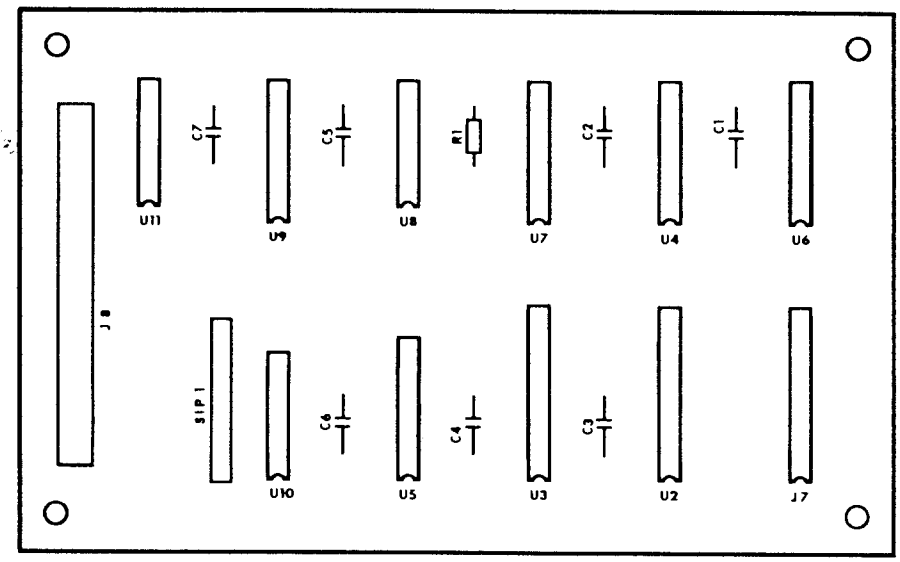

INTERFACE ASSY. (A2), PARTS LIST

REFERENCE	DESCRIPTION	PART NO.
	Interface Board Assy.	MA-306
C1-C7	Capacitor, .01UF, 50V	XO-229
R1	Resistor, 1K OHM, 5% ¼W	XO-5
R2	Resistor, DIP, 3.3K OHM, 9 PIN	XO-157
U2, U3	IC, SN74LS244, Octal Buffer	XO-117
U4-U7	IC, SN74LS191, Binary Counter	XO-116
U8	IC, SN74LS74N, Dual-Flip Flop	XO-434
U9	IC, SN74157, 2-1 Multiplexer	XO-114
U10, U11	IC, 14584, CMOS Inverter	XO-119
	20 PIN Socket	XO-491

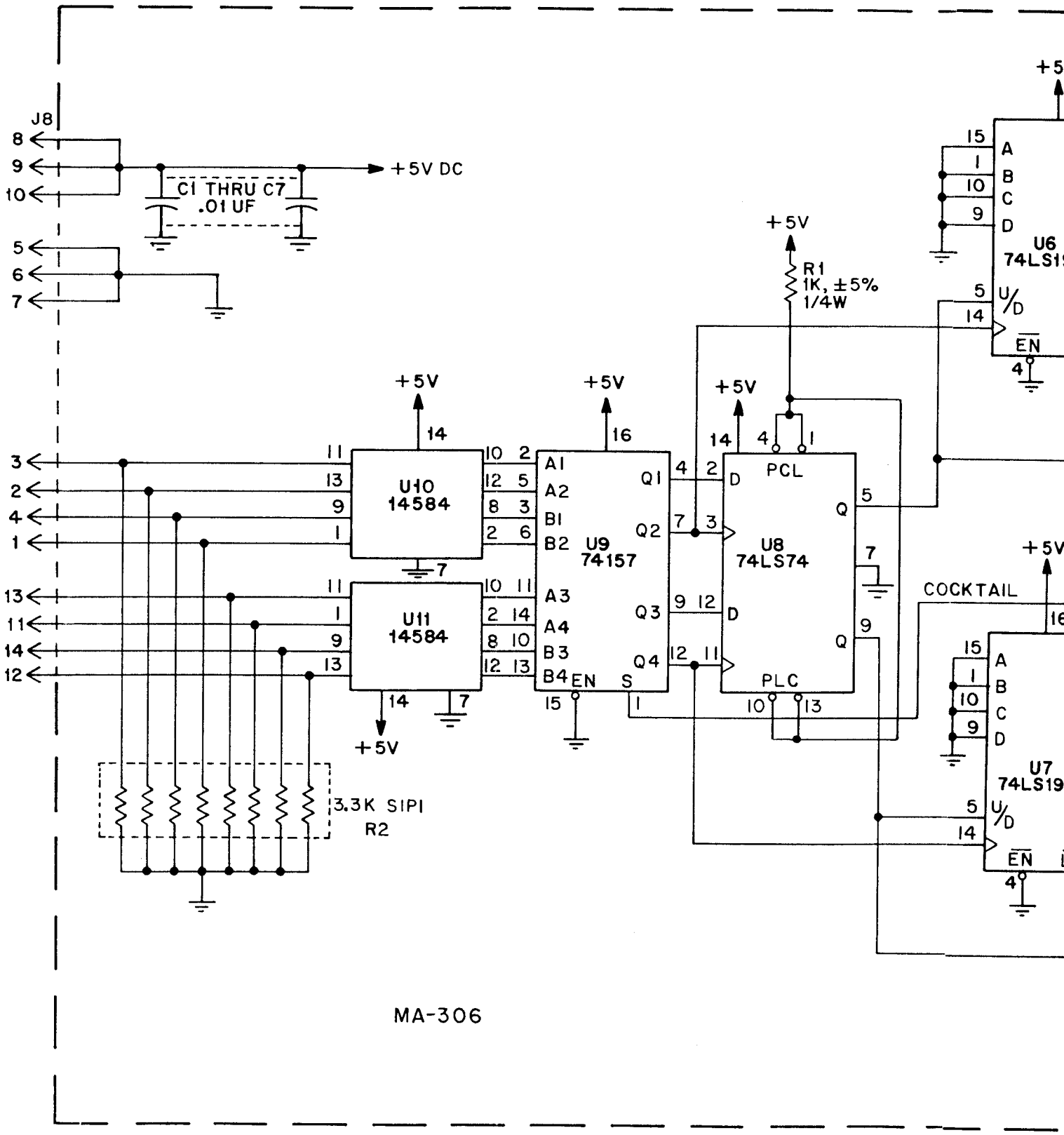
J8
8
9
10
5
6
7
+5V DC
C1 THRU C7
.01 UF
+5V
R1
1K, ±5%
1/4W
U6
74LS1
15
A
1
B
10
C
9
D
5
U/D
14
EN
4
+5V
+5V
+5V
14
16
14
4
1
3
2
4
1
13
11
14
12
11
13
9
1
9
13
U10
14584
U11
14584
10 2
12 5
8 3
2 6
10 11
2 14
8 10
12 13
A1
A2
B1
B2
A3
A4
B3
B4
EN
S
U9
74157
Q1
Q2
Q3
Q4
4
2
7
3
9 12
12 11
15
1
D
PCL
PLC
Q
5
7
9
10
13
U8
74LS74
COCKTAIL
+5V
16
U7
74LS19
3.3K SIPI
R2
7
14
7
+5V

MA-306

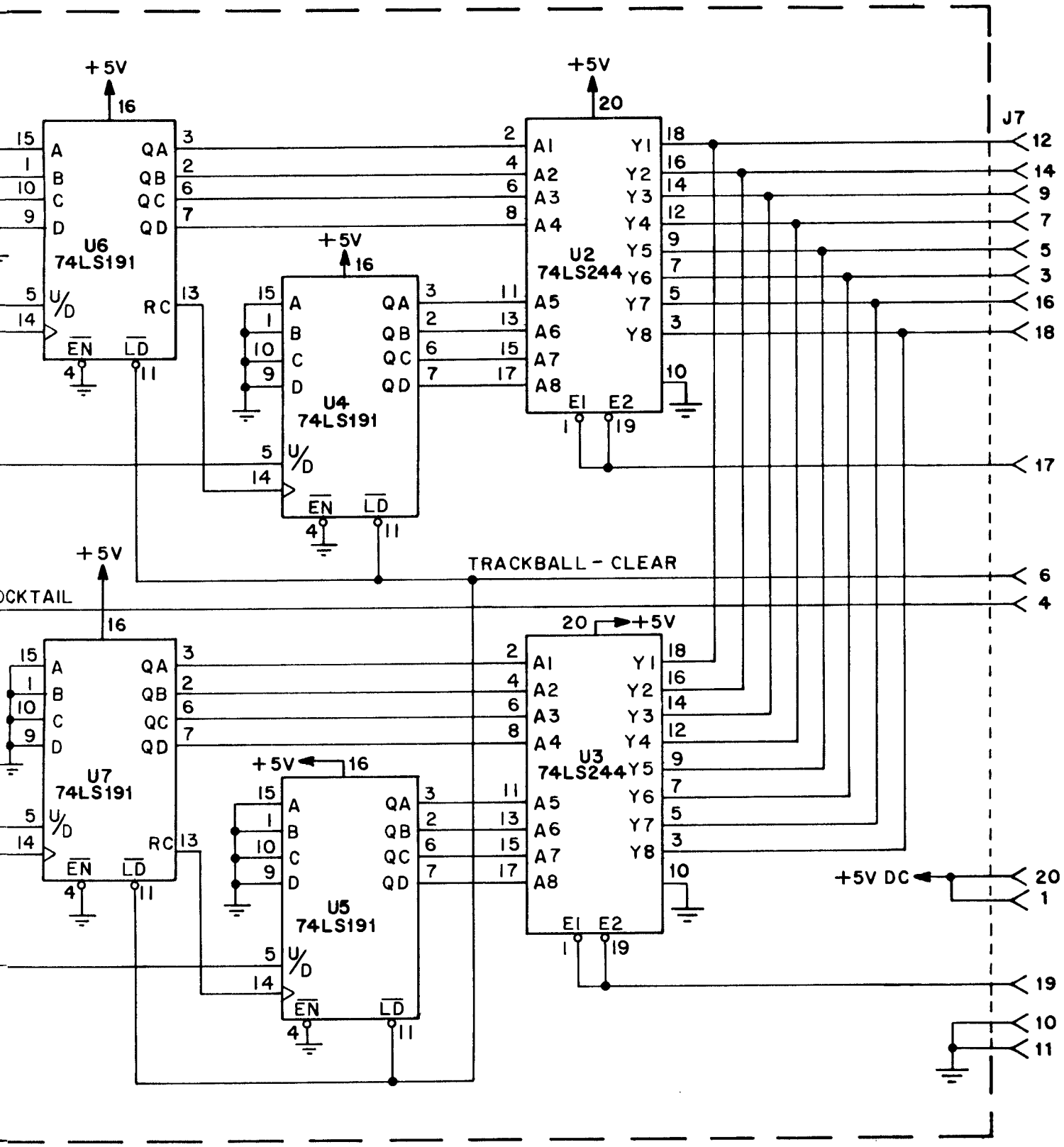

INTERFACE ASSY. (A2), SCHEMATIC DIAGRAM

X. WIRING AND SCHEMATIC DIAGRAMS, PARTS LISTS

POWER SUPPLY ASSY. (A3), COMPONENT LOCATION

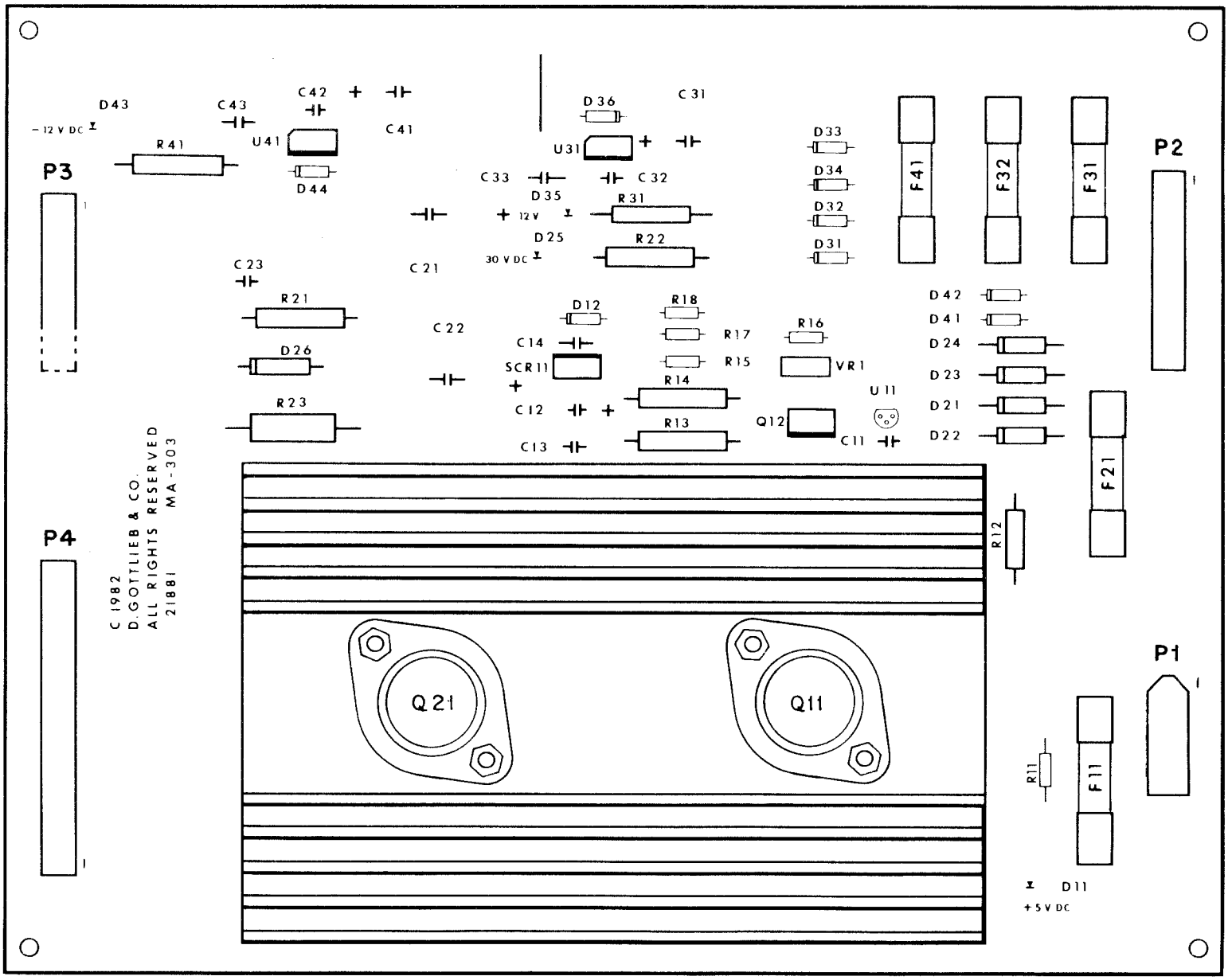

POWER SUPPLY ASSY. (A3), PARTS LIST

REFERENCE	DESCRIPTION	PART NO.	REFERENCE	DESCRIPTION	PART NO.
	Power Supply Assy.	MA-303	P2	Connector, 10 PIN	XO-531
C11, C32, C42	Capacitor, .01UF, 16V	XO-278	P3	Connector, 7 PIN	XO-526
C12	Capacitor, 100UF, 16V	XO-235	P4	Connector, 16 PIN	XO-372
C13, C23	Capacitor, 0.1UF, 100V	XO-234	Q11	Transistor, PNP, 2N5879	XO-323
C14, C33, C43	Capacitor, 0.2UF, 16V	XO-205	Q12	Transistor, NPN, T1P31B	XO-641
C21, C22	Capacitor, 2200UF, 75V	XO-132	Q21	Transistor, NPN, 2N3055	XO-301
C31, C41	Capacitor, 470UF, 35V	XO-284	R11	Resistor, 470 OHM, 5% ½W	XO-55
D11, D25			R12	Resistor, 100 OHM, 5% 1W	XO-137
D35, D43	Diode, Light Emitting MV-5752	XO-270	R13, R14	Resistor, 12 OHM, 5% 2W	XO-138
D12	Diode, Zener, 5.6V, 5%, 1W, 1N4734A	XO-255	R15	Resistor, 200 OHM, 5% ¼W	XO-143
			R16	Resistor, 180 OHM, 5% ¼W	XO-24
D21-D24	Diode, 1N5401	XO-263	R17	Resistor, 100 OHM, 5% ¼W	XO-28
D26	Diode, Zener, 30V, 5%, 5W, 1N5363B	XO-273	R18	Resistor, 20 OHM, 5% ¼W	XO-29
			R21, R22	Resistor, 1.8KOHM, 5% 2W	XO-135
D31-D34, D36			R23	Resistor, 200 OHM, 5% 5W	XO-133
D41, D42, D44	Diode, 1N4004	XO-254	R31, R41	Resistor, 750 OHM, 5% 1W	XO-136
F11	Fuse, 6¼ AMP SLO-BLO	EL-8	SCR11	Silicon Controlled Rectifier	XO-131
F21	Fuse, 1.5 AMP SLO-BLO	EL-34	U11	Diode, Programmable Zener TL431	XO-272
F31, F32	Fuse, ¼ AMP SLO-BLO	EL-5	U31	Voltage Regulator -12V, LM 340T	XO-473
F41	Fuse, 1 AMP SLO-BLO	EL-6	U41	Voltage Regulator -12V, LM 320	XO-130
P1	Connector, 4 PIN	PS-87	VR1	Potentiometer, 100 OHM	XO-134

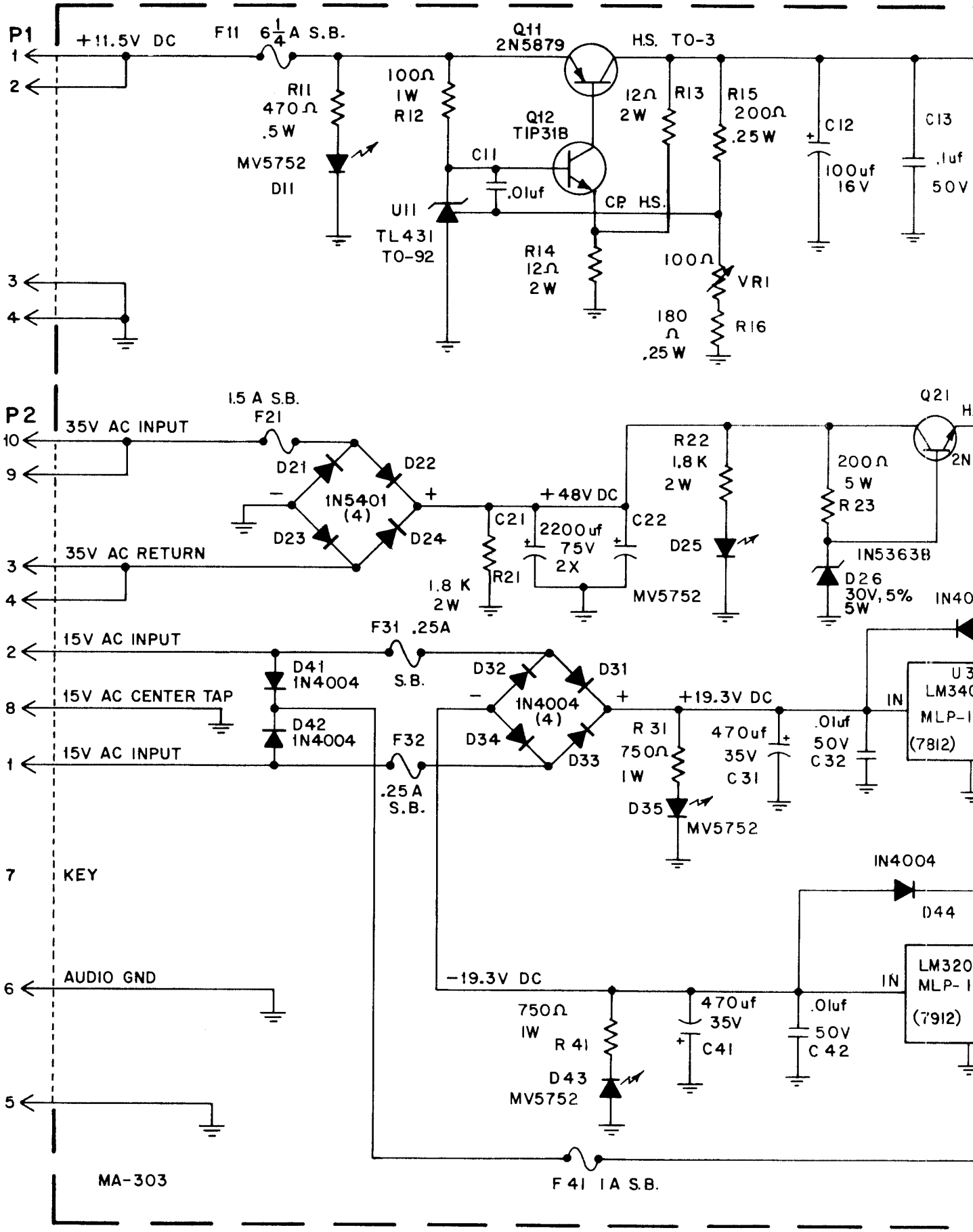
P1
1
2
+11.5V DC
F11 6¼A S.B.
R11 470Ω .5W
MV5752 D11
100Ω 1W R12
Q11 2N5879
H.S. TO-3
Q12 TIP31B
C11 .01uf
U11 TL431 TO-92
CP. H.S.
12Ω 2W R13
R15 200Ω .25W
C12 100uf 16V
C13 .1uf 50V
R14 12Ω 2W
100Ω VR1
180Ω .25W R16
3
4
P2
10
9
35V AC INPUT
1.5 A S.B. F21
D21 D22 D23 D24 1N5401 (4)
+48V DC
C21 1.8K 2W R21
2200uf 75V 2X
C22
R22 1.8K 2W
D25 MV5752
Q21
200Ω 5W R23
IN5363B
D26 30V, 5% 5W
3
4
35V AC RETURN
2
15V AC INPUT
F31 .25A S.B.
D41 1N4004
D42 1N4004
8
15V AC CENTER TAP
1
15V AC INPUT
F32 .25A S.B.
D32 D31 D34 D33 1N4004 (4)
+19.3V DC
R 31 750Ω 1W
D35 MV5752
470uf 35V C31
.01uf 50V C32
IN
U3 LM340 MLP-I (7812)
IN4004
D44
7
KEY
6
AUDIO GND
-19.3V DC
750Ω 1W R 41
D43 MV5752
470uf 35V C41
.01uf 50V C 42
LM320 MLP-I (7912)
5
MA-303
F 41 1A S.B.

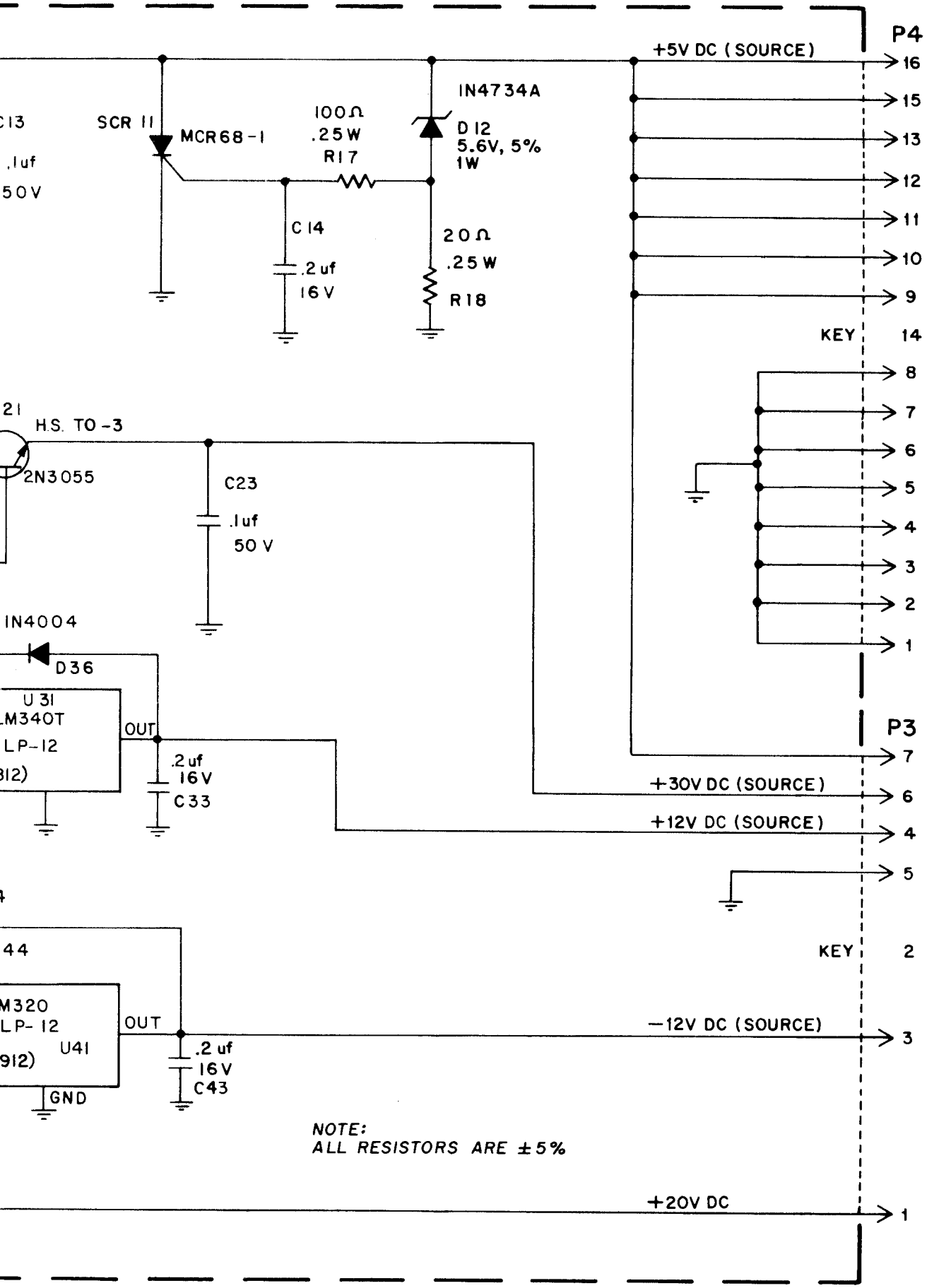

POWER SUPPLY ASSY. (A3), SCHEMATIC DIAGRAM

X. WIRING AND SCHEMATIC DIAGRAMS, PARTS LISTS

SOUND/SPEECH ASSY. (A6), COMPONENT LOCATION

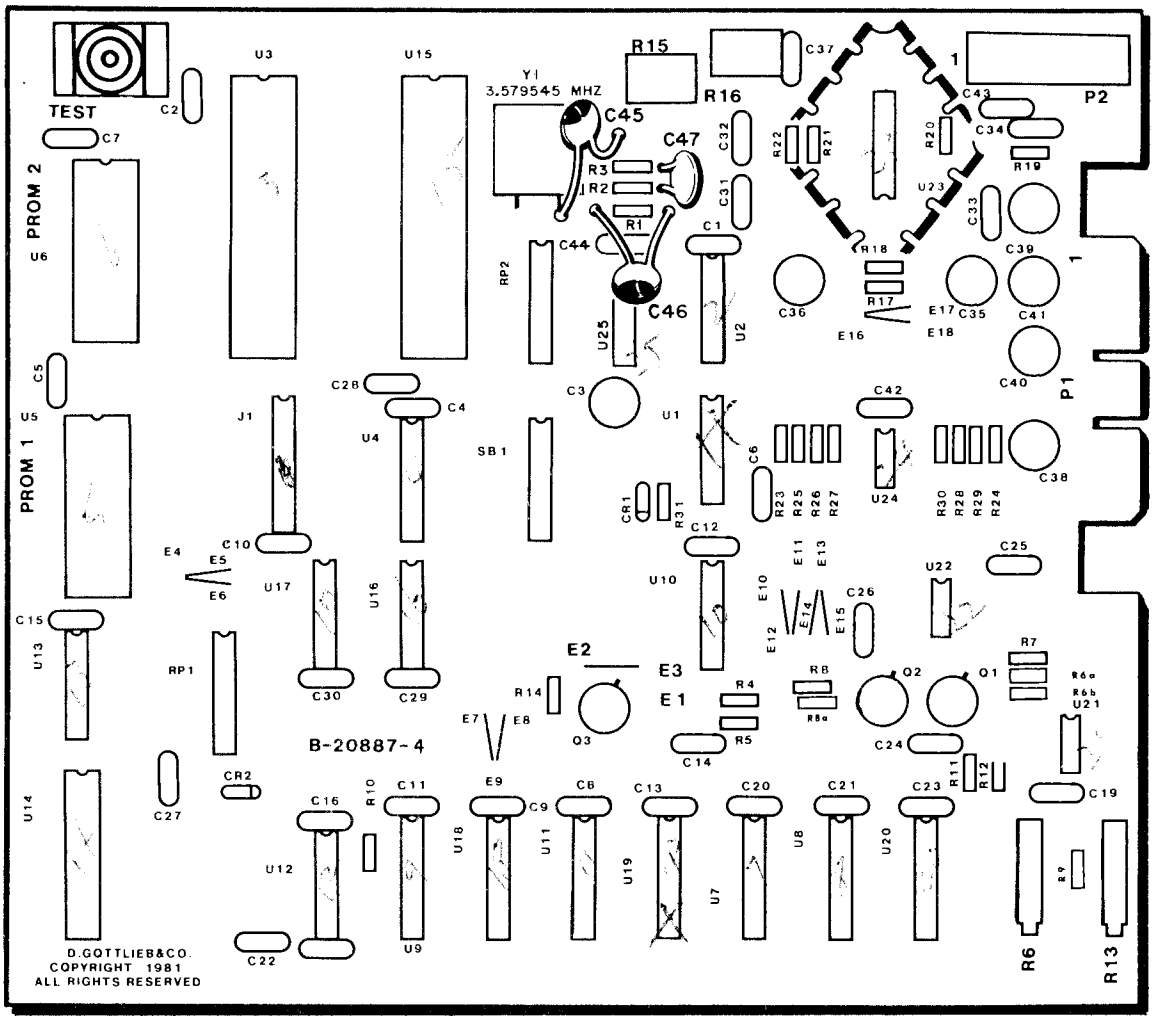

SOUND/SPEECH ASSY. (A6), PARTS LIST

REFERENCE	DESCRIPTION	PART NUMBER
	Sound/Speech Assembly	MA-216
C1, C2	Capacitor, 0.1UF, 25V	XO-248
C4, C13		
C15, C16, C19		
C20, C21, C23		
C25, C26		
C28-C30, C33		
C42, C44		
C31-C32	Capacitor, .047UF, 25V	XO-222
C37	Capacitor, 4.7UF, 35V	XO-291
C3, C38-C41	Capacitor, 47UF, 50V	XO-210
C14, C24	Capacitor, 100PF	XO-223
C22	Capacitor, 300PF	XO-283
C27	Capacitor, 1UF, 50V	XO-217
C36	Capacitor, 470UF, 35V	XO-284
C45, C46	Capacitor, 33PF	XO-277
C47	Capacitor, .01 UF, 100V	XO-202
CR1	Diode, 1N4148	XO-261
CR2	Diode, Zener, 1N5225B	XO-269
Q1, Q3	Transistor, NPN, 2N2222A	XO-320
Q2	Transistor, PNP, 2N2907A	XO-321
R1, R4, R5 R11, R12	Resistor, 5.6K ohm, 5%, ¼W	XO-19
R2, R3	Resistor, 2K ohm, 5%, ¼W	XO-14
R6, R13	Potentiometer, 10K	XO-108
R6A, R7, R23-R30	Resistor, 10K ohm, 5%, ¼W	XO-18
R8, R8A, R14	Resistor, 1K ohm, 5%, ¼W	XO-5
R6B	Resistor, 1.8K ohm, 5%, ¼W	XO-37
R9	Resistor, 2.2K ohm, 5%, ¼W	XO-27
R10	Resistor, 1.5K ohm, 5%, ¼W	XO-20
R15, R16	Potentiometer, 10K ohm	XO-109
R18, R21	Resistor, 100K ohm, 5%, ¼W	XO-45
R22	Resistor, 2K ohm, 5%, ¼W	XO-14
R31	Resistor, 68K ohm, 5%, ¼W	XO-189
RP1, RP2	Resistor, Dip	XO-168
SB1	Switch, Dip	XO-505
SW1	Switch, Momentary Pushbutton	XO-515
U1	IC, 7414	XO-397
U2	IC, SN74LS74N	XO-434
U3	CPU, R6502-13	XO-360
U4	IC, SN74LS138N	XO-437
U5, U6	EPROM, 2716	PR-53
U7-U9, U11, U18	IC, SN74LS75	XO-394
U10	IC, SN74LS02N	XO-428
U12	IC, SN7407N	XO-384
U13	IC, Inverter, SN74LS05N	XO-411
U14	Voice Chip, SC01	XO468
U15	RRIOT, R6532-18	XO-361
U16	IC, SN74LS04N	XO-418
U17	IC, SN74LS30N	XO-432
U19, 20	Converter, PMI, 1408A-6P	XO-416
U21, U22	IC, LM741CP	XO-393
U23	IC, LM379S	XO-395
U24	IC, Dual Comparitor, LM193	XO-396
U25	Inverter, 7404	XO-402
Y1	Crystal, 3.579545MHZ	XO-456
	Socket 22 Pin Dip	XO-467
	Socket 24 Pin (2)	XO-529
	Socket 40 Pin (2)	XO-530

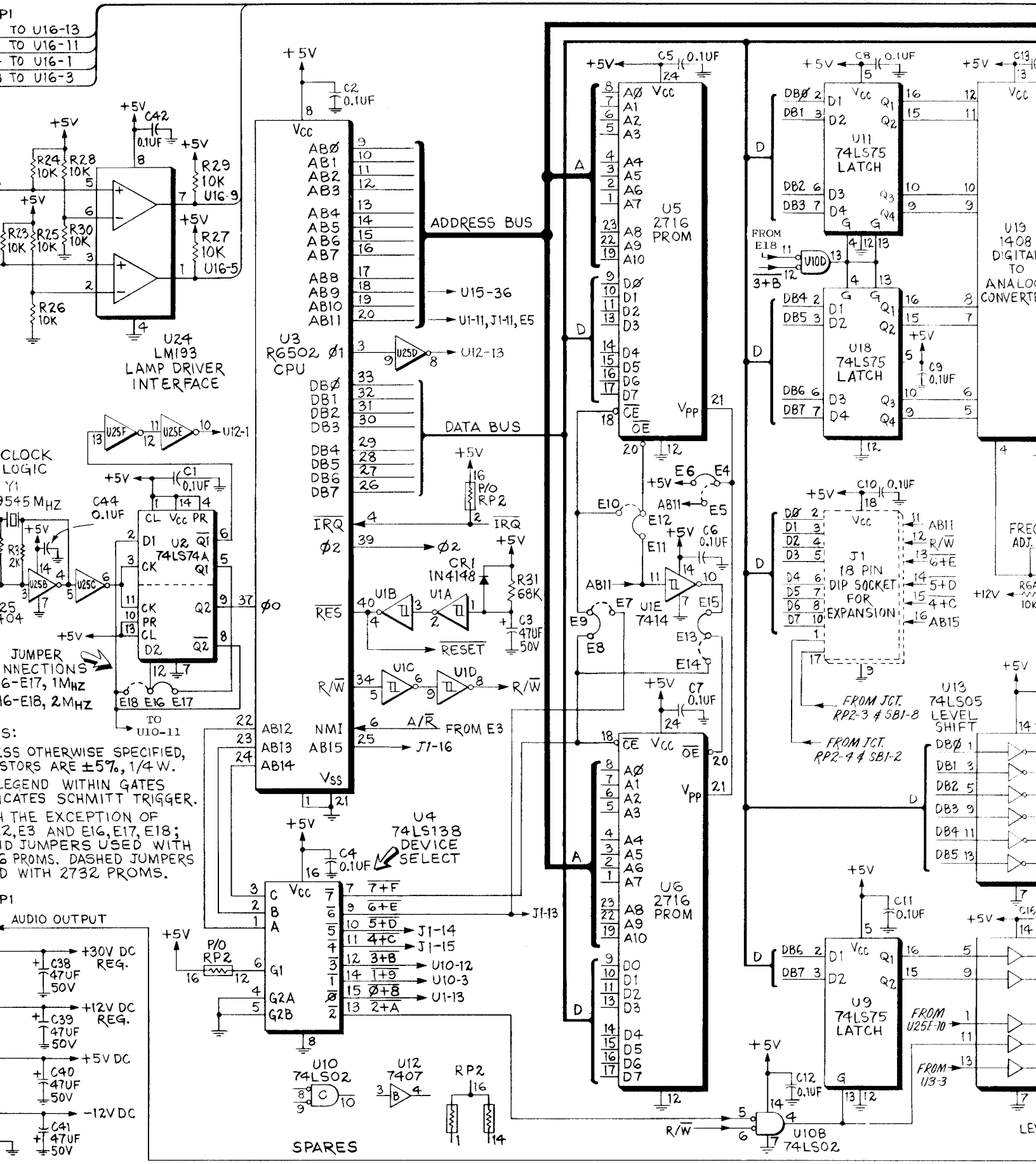

P1
TO U16-13
TO U16-11
TO U16-1
TO U16-3
U24
LM193
LAMP DRIVER
INTERFACE
U3
R6502
CPU
ADDRESS BUS
DATA BUS
U15-36
U1-11, J1-11, E5
U12-13
U12-1
CLOCK
LOGIC
Y1
9545 MHZ
U2
74LS74A
JUMPER
NNECTIONS
6-E17, 1MHZ
16-E18, 2MHZ
TO
U10-11
S:
SS OTHERWISE SPECIFIED,
STORS ARE ±5%, 1/4 W.
LEGEND WITHIN GATES
ICATES SCHMITT TRIGGER.
H THE EXCEPTION OF
2, E3 AND E16, E17, E18;
ID JUMPERS USED WITH
6 PROMS. DASHED JUMPERS
D WITH 2732 PROMS.
P1
AUDIO OUTPUT
+30V DC
REG.
+12V DC
REG.
+5V DC
-12V DC
U4
74LS138
DEVICE
SELECT
U10
74LS02
U12
7407
RP2
SPARES
U5
2716
PROM
U6
2716
PROM
U1E
7414
U10B
74LS02
U11
74LS75
LATCH
U18
74LS75
LATCH
U19
1408
DIGITAL
TO
ANALOG
CONVERTER
J1
18 PIN
DIP SOCKET
FOR
EXPANSION
FROM JCT.
RP2-3 & SB1-8
FROM JCT.
RP2-4 & SB1-2
U13
74LS05
LEVEL
SHIFT
U9
74LS75
LATCH
FROM
U25E-10
FROM
U3-3
FREQ
ADJ.

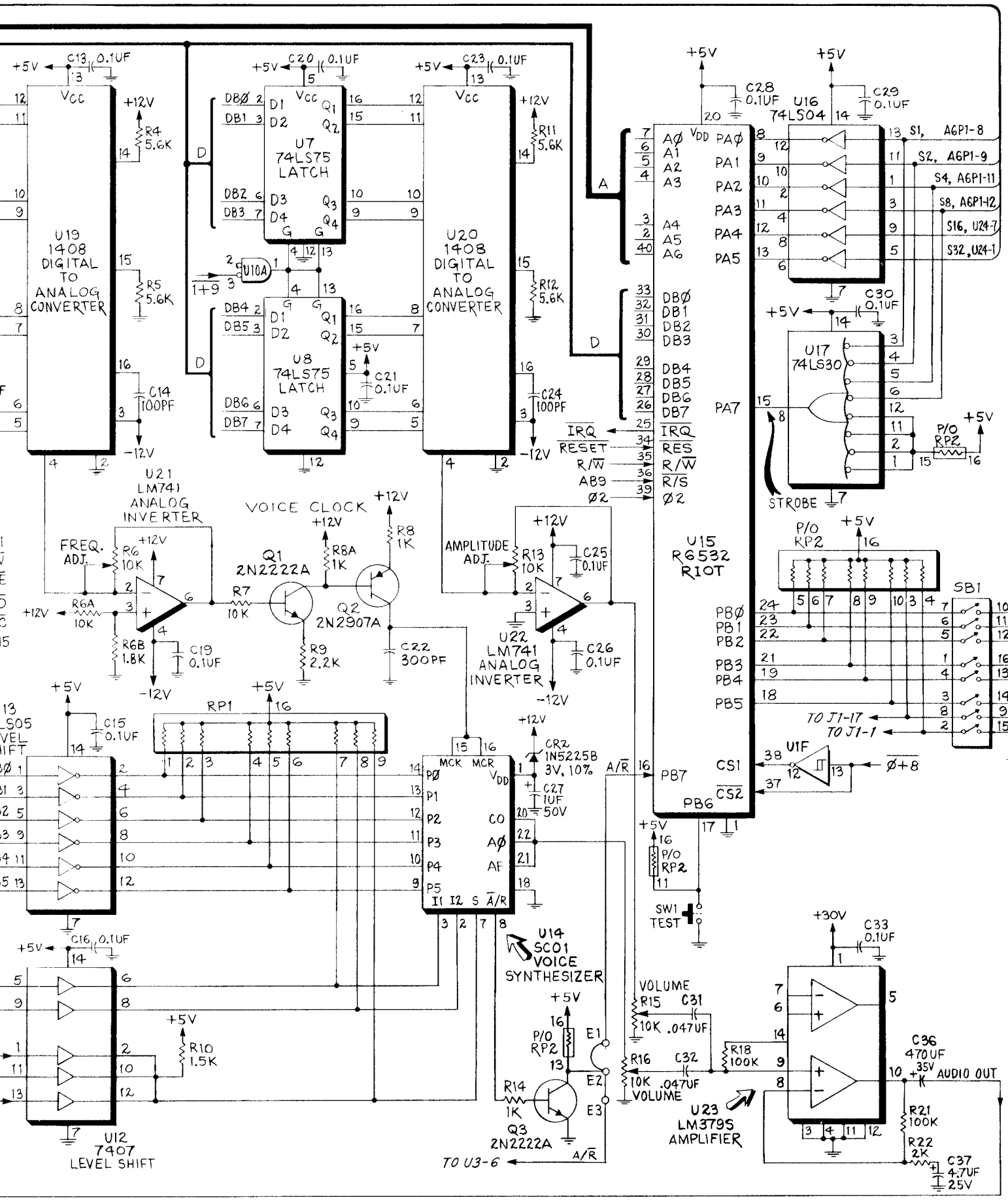

SOUND/SPEECH ASSY. (A6), SCHEMATIC DIAGRAM

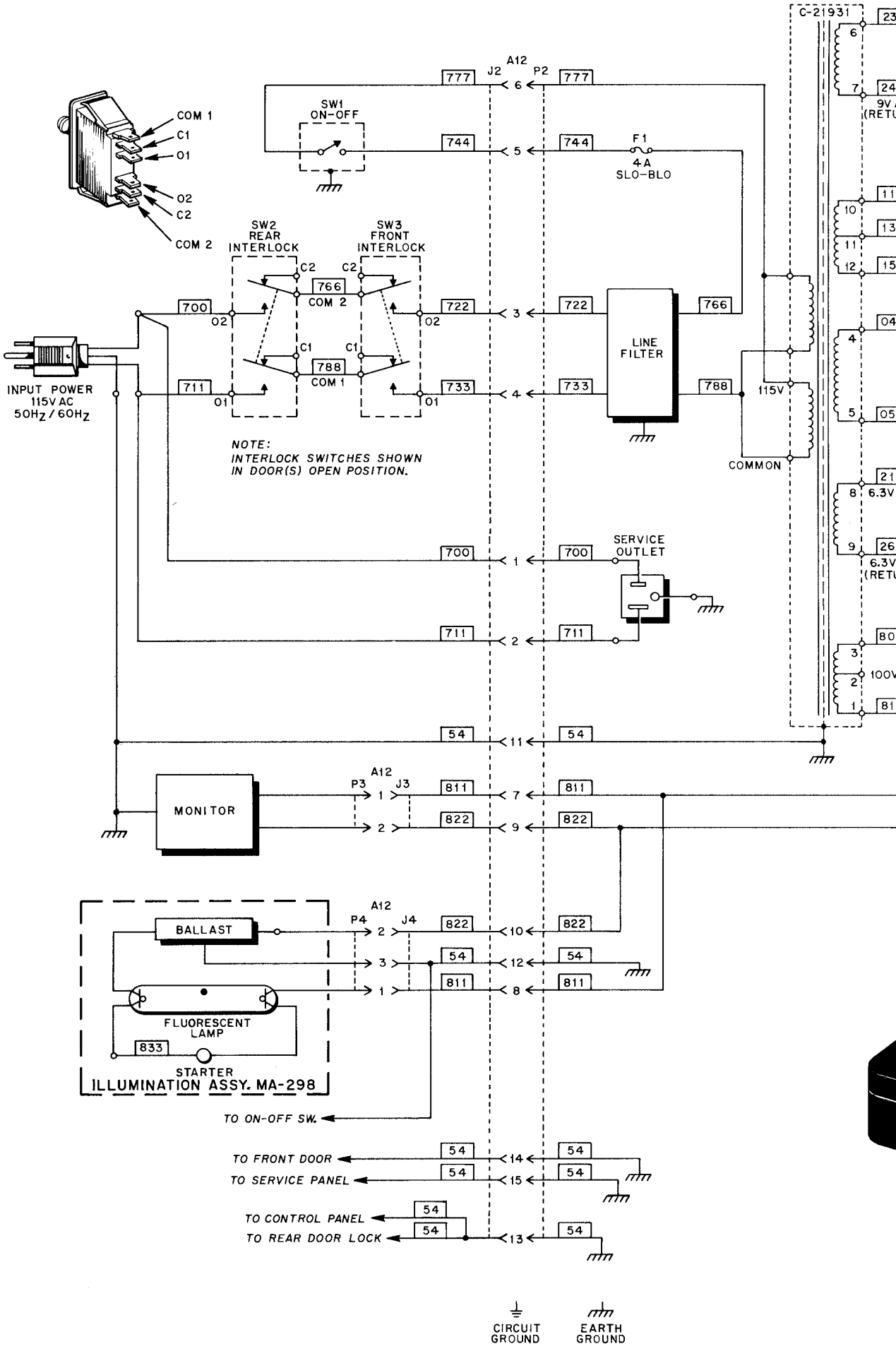
C-21931
A12
J2
P2
777
744
F1
4-A
SLO-BLO
SW1
ON-OFF
COM 1
C1
O1
O2
C2
COM 2
SW2
REAR
INTERLOCK
SW3
FRONT
INTERLOCK
766
788
700
711
722
733
LINE
FILTER
115V
COMMON
INPUT POWER
115V AC
50Hz / 60Hz
NOTE:
INTERLOCK SWITCHES SHOWN
IN DOOR(S) OPEN POSITION.
SERVICE
OUTLET
MONITOR
P3
J3
811
822
BALLAST
P4
J4
54
FLUORESCENT
LAMP
833
STARTER
ILLUMINATION ASSY. MA-298
TO ON-OFF SW.
TO FRONT DOOR
TO SERVICE PANEL
TO CONTROL PANEL
TO REAR DOOR LOCK
CIRCUIT
GROUND
EARTH
GROUND

X. WIRING AND SCHEMATIC DIAGRAMS, PARTS LISTS

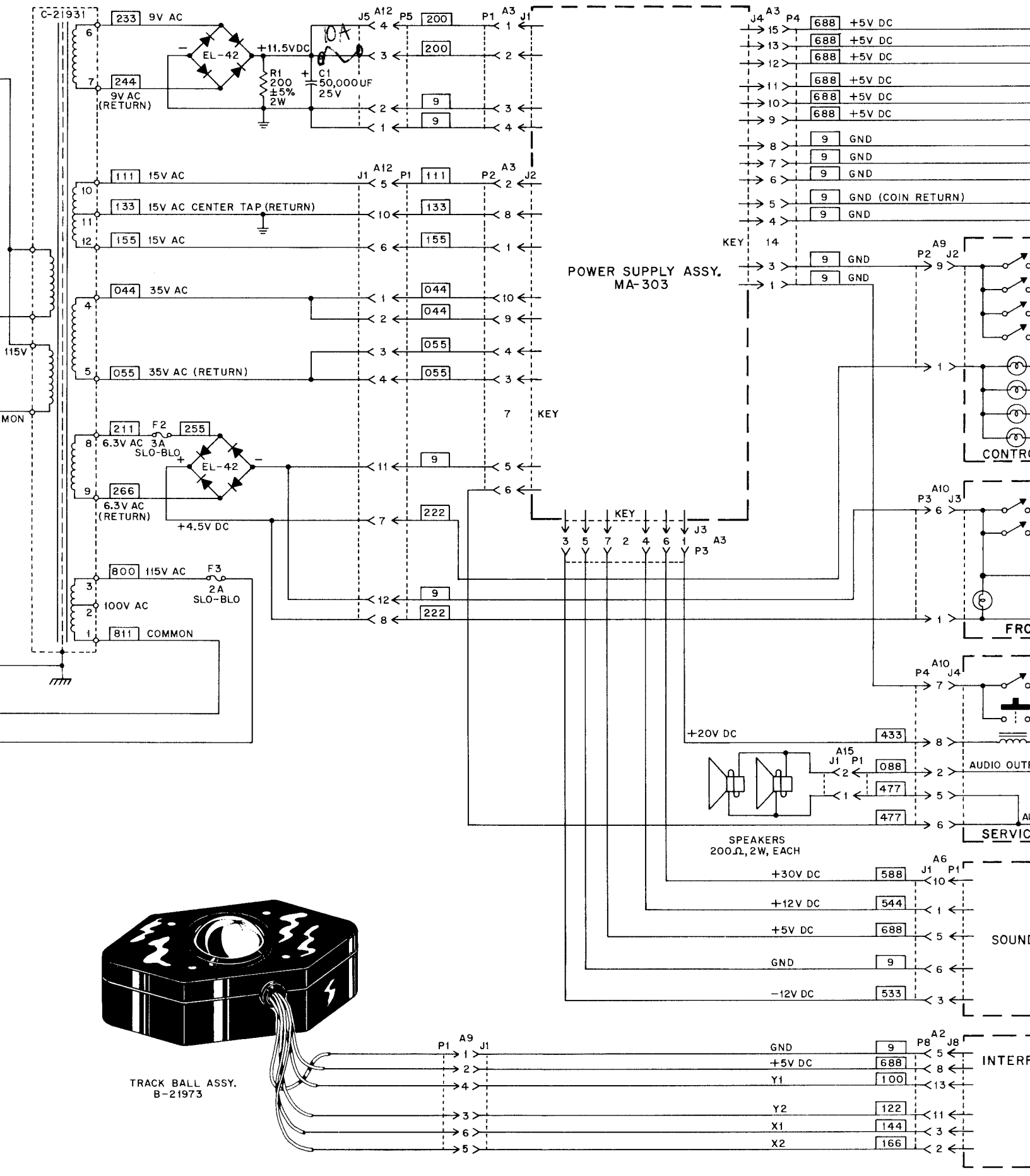

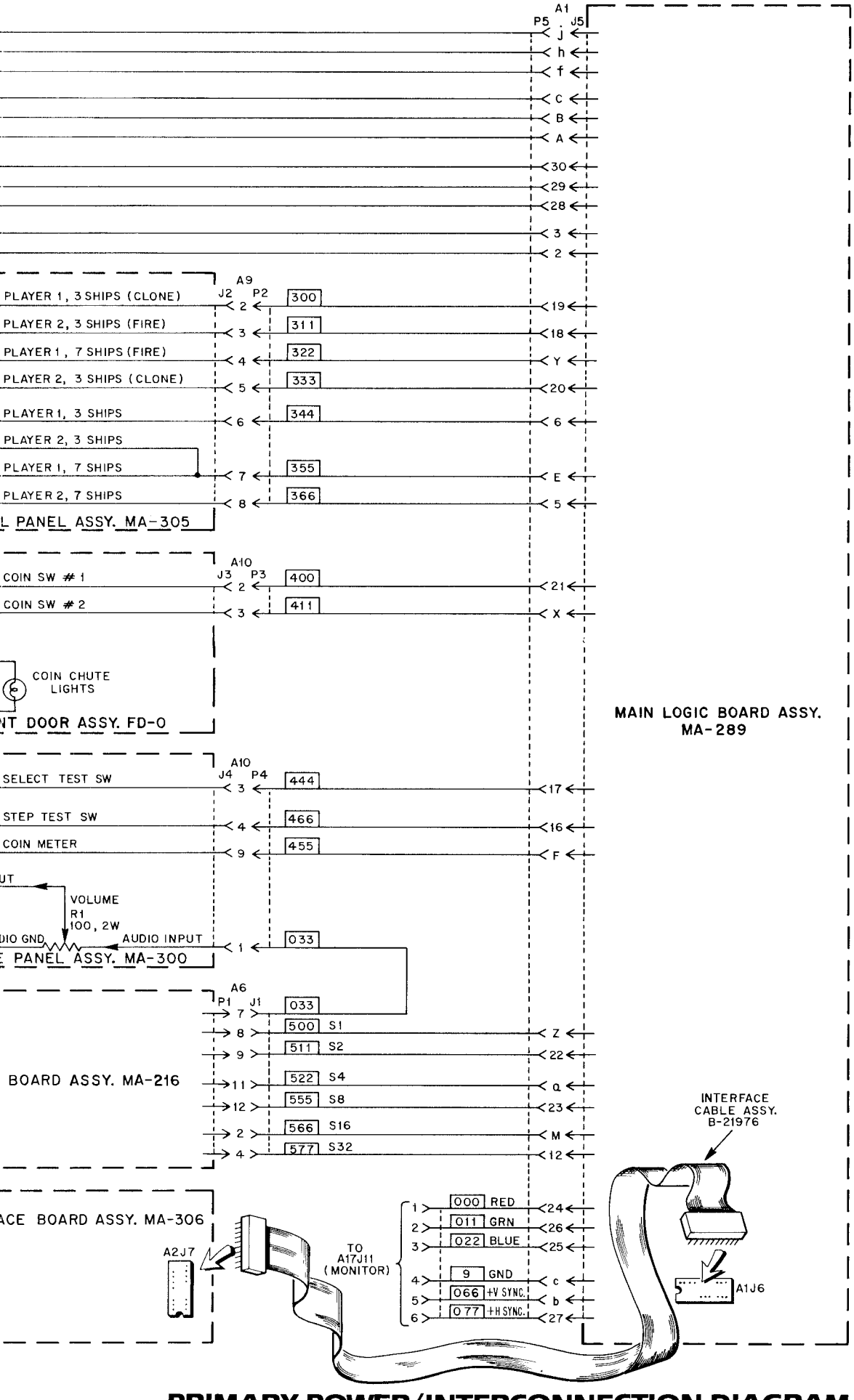

PRIMARY POWER/INTERCONNECTION DIAGRAM

XI. PARTS INFORMATION

TABLE OF CONTENTS

PAGE

SPEAKER/MARQUEE ASSY. 34

ILLUMINATION ASSY. 34

CONTROL PANEL ASSY. 35

SERVICE PANEL ASSY. 36

BOTTOM PANEL ASSY. 37

CABINET PARTS 38

CABINET PARTS 39

XI. PARTS INFORMATION

SPEAKER/MARQUEE ASSY. AND ILLUMINATION ASSY.

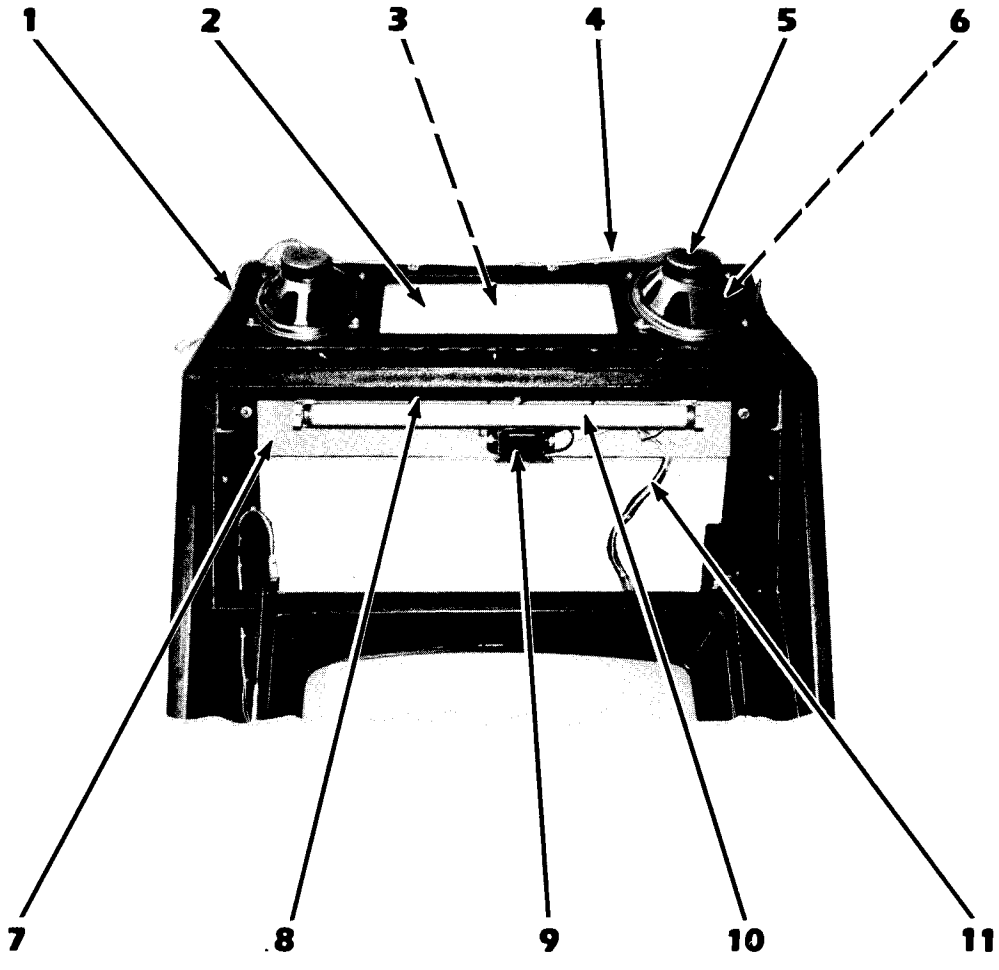

ITEM	DESCRIPTION	PART NO.
1.	Speaker/Marquee Assy.	MA-308
2.	Plexiglass Panel (Clear)	B-21895
3.	Lexan Overlay (Screen)	D-21892
4.	Cable Assy.	MA-318
5.	Speaker (2)	EL-74
6.	Speaker Grill (2)	B-21893
7.	Illumination Assy.	MA-298
8.	Starter	EL-69
9.	Ballast (60 HZ)	EL-70
10.	Lamp, Fluorescent	LA-4
11.	Cable Assy.	MA-312

XI. PARTS INFORMATION

CONTROL PANEL ASSY.

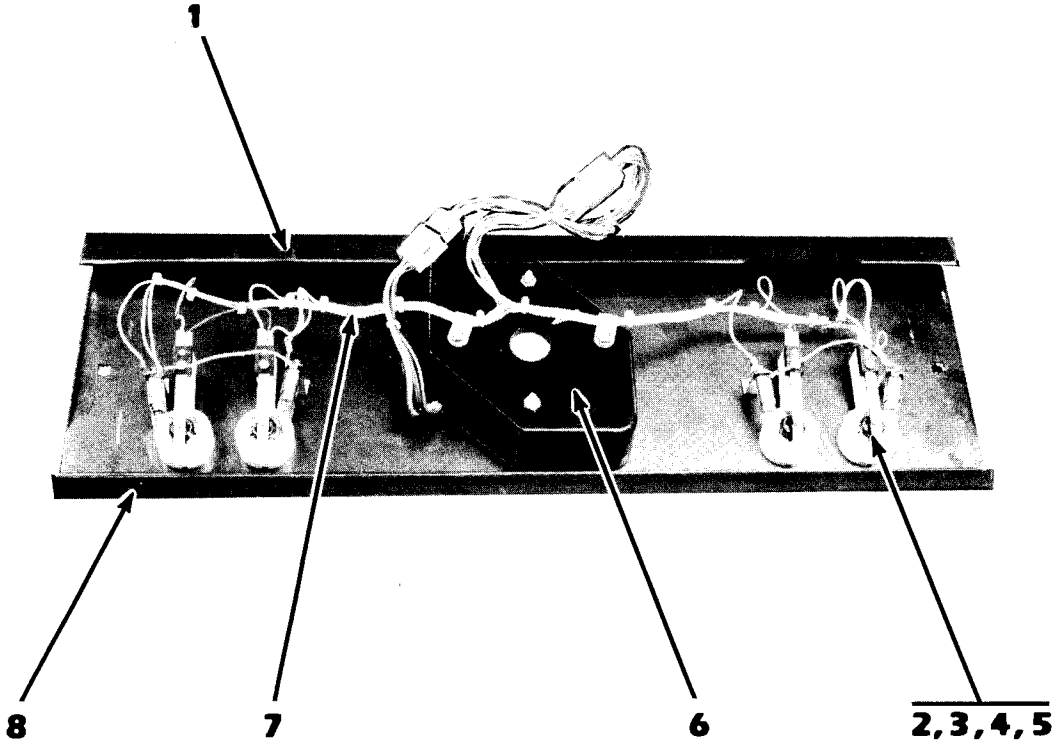

ITEM	DESCRIPTION	PART NO.
1.	Control Panel Assy.	MA-305
2.	Short Button (4)	A-21970
3.	Button Holder and Switch (4)	A-21971
4.	Lamp (4)	LA-0
5.	Socket (4)	A-21898
6.	Track Ball Assy.	B-21973
7.	Cable Assy.	MA-317
8.	Lexan Overlay	D-21899

XI. PARTS INFORMATION

SERVICE PANEL ASSY.

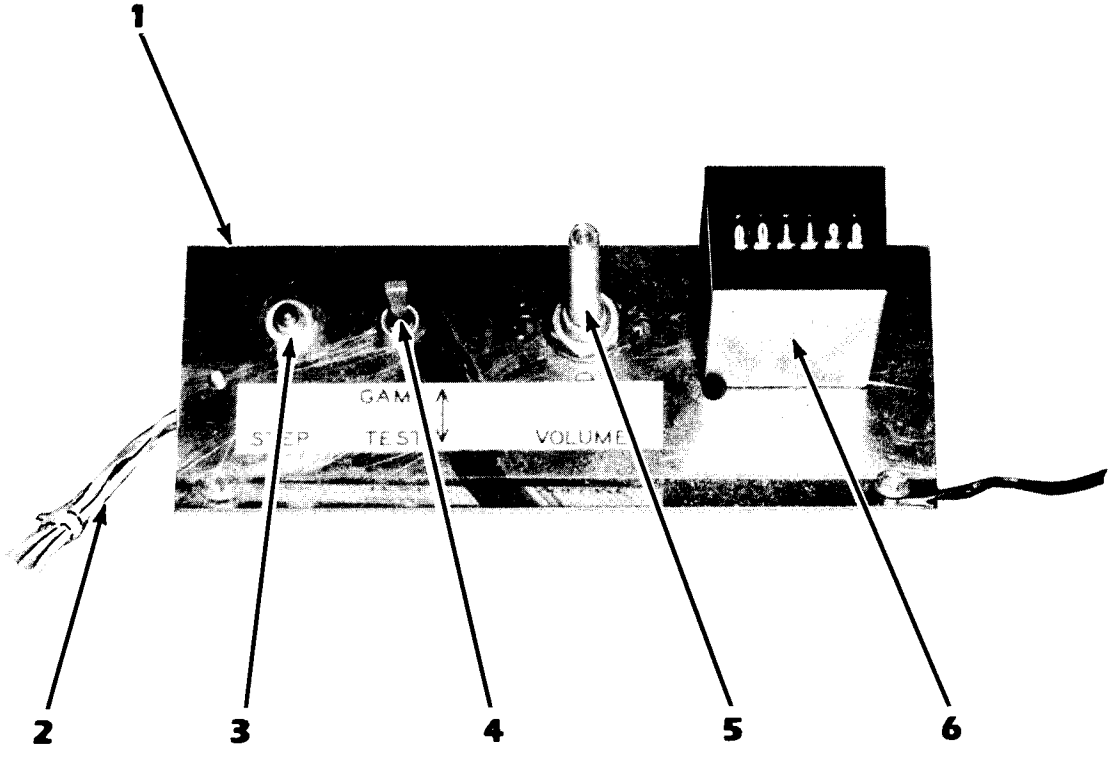

ITEM	DESCRIPTION	PART NO.
1.	Service Panel Assy.	MA-300
2.	Switch (Push Button)	EL-57
3.	Switch (Toggle)	EL-85
4.	Volume Control	XO-104
5.	Coin Meter	EL-84
6.	Cable Assy.	MA-316

XI. PARTS INFORMATION

BOTTOM PANEL ASSY.

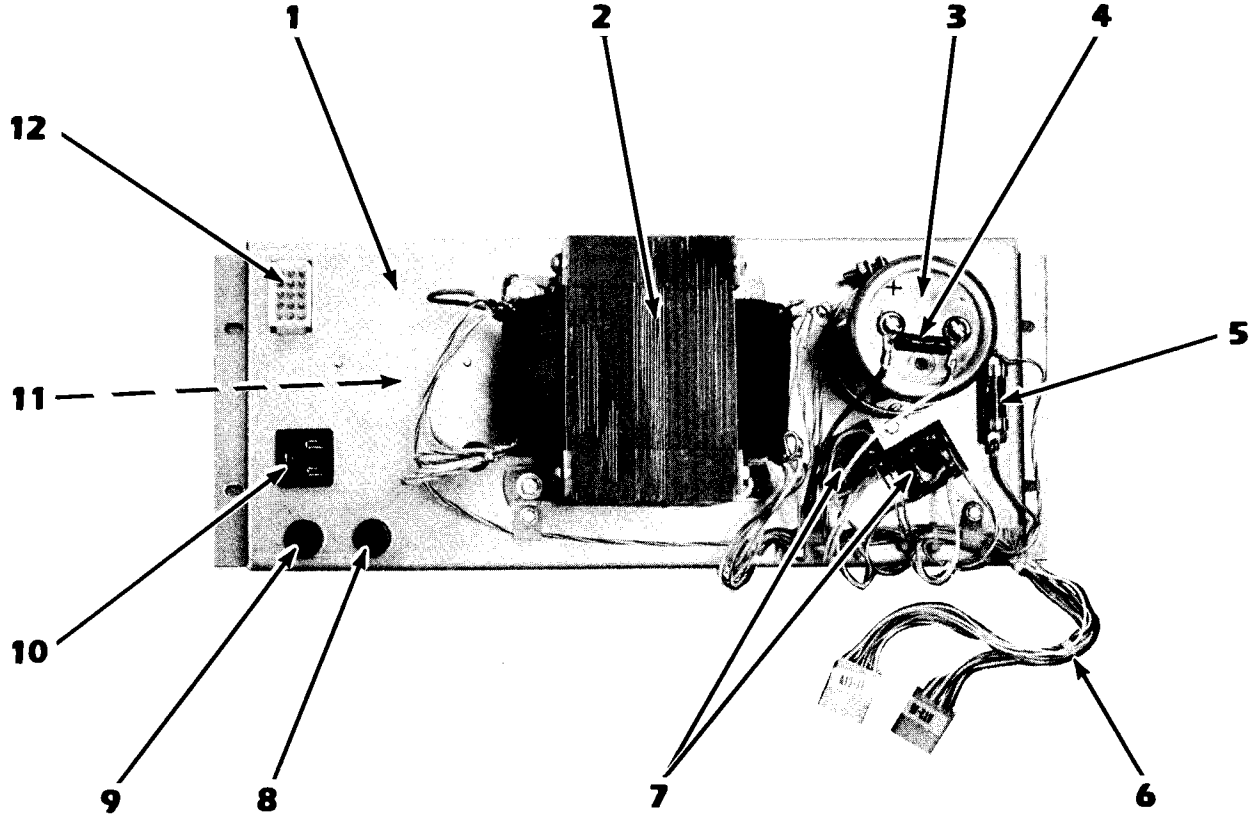

ITEM	DESCRIPTION	PART NO.
1.	Bottom Panel Assy.	MA-301
2.	Transformer	C-21931
3.	Capacitor, 50, 000UF, 25V	XO-141
4.	Resistor, 200 OHM, 5%, 2W	XO-142
5.	Fuse, 3 AMP, SLO-BLO	EL-9
6.	Cable Assy. (Secondary)	MA-314
7.	Bridge Rectifier (2)	EL-42
8.	Fuse, 2 AMP, SLO-BLO	EL-7
9.	Fuse, 4 AMP, SLO-BLO	EL-33
10.	Service Outlet	A-18133
11.	Line Filter	EL-50
12.	Cable Assy. (Primary)	MA-311

XI. PARTS INFORMATION

CABINET PARTS

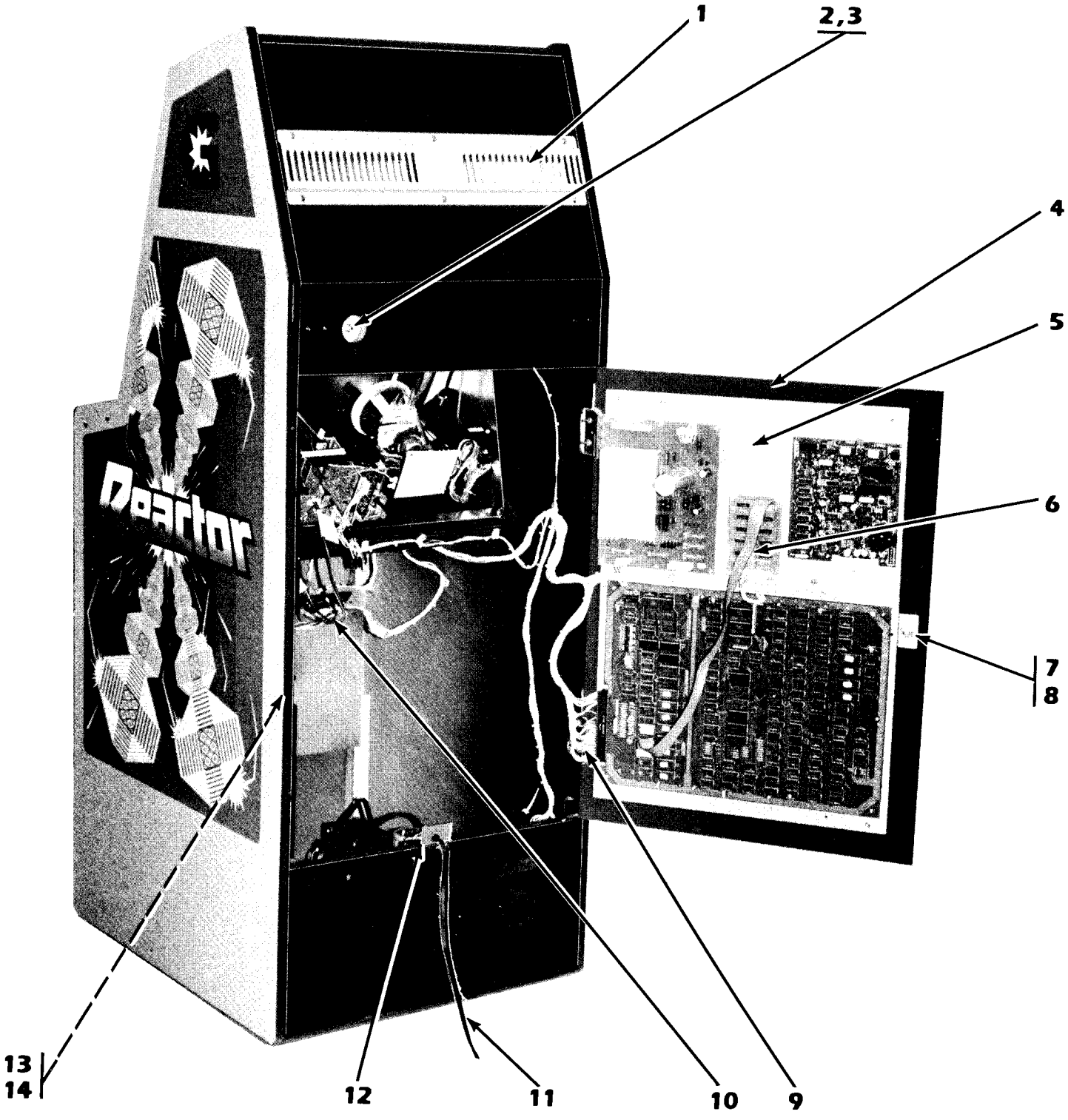

ITEM	DESCRIPTION	PART NO.	ITEM	DESCRIPTION	PART NO.
1.	Vent Channel (2)	D-21754	8.	Anchor Plate, Lock	MH-1
2.	On-Off Switch	EL-56	9.	Cable Assy. Master Electronics	MA-313
3.	Switch Plate	A-10949	10.	Cable Assy. High Voltage	MA-310
4.	Back Door	D-21896	11.	Line Cord	B-15357
5.	Master Electronic Board	MA-307	12.	Cover Plate, Line Cord	A-21955
6.	Interface Cable Assy.	B-21976	13.	Interlock Switch	EL-66
7.	Lock	MH-0	14.	Cover, Interlock Switch	A-21888

XI. PARTS INFORMATION

CABINET PARTS

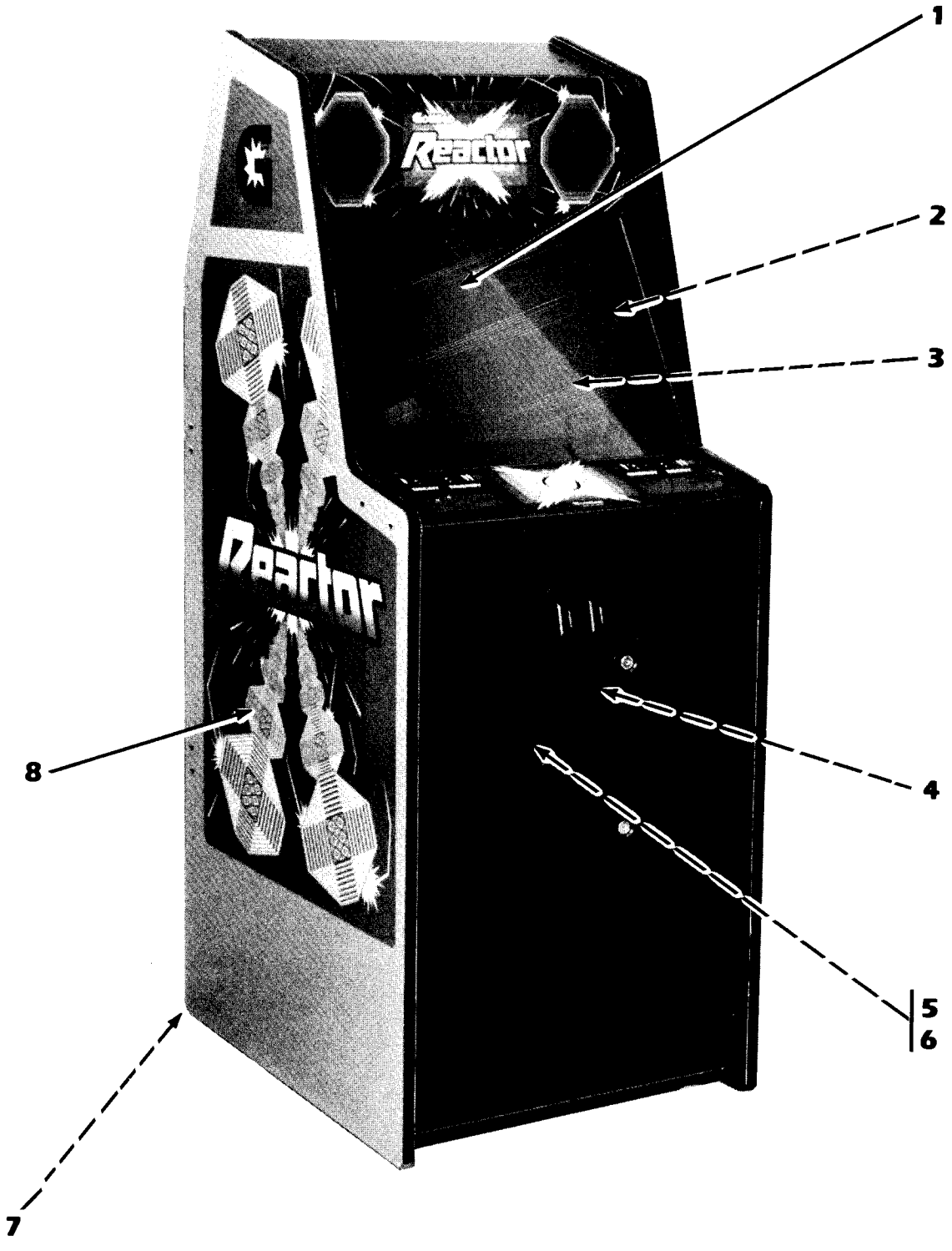

ITEM	DESCRIPTION	PART NO.	ITEM	DESCRIPTION	PART NO.
1.	Top Glass (Tempered)	A-21889	6.	Cover, Interlock Switch	A-21888
2.	Monitor Mask	D-21885Y	7.	3" Leg Adjuster (4)	MH-21
3.	Monitor	EL-81	8.	Decal (Right)	E-21963
4.	Cable Assy., Front Door	MA-315		Decal (Left)	E-21962
5.	Interlock Switch	EL-66			

Gottlieb™
AMUSEMENT GAMES
165 W. Lake Street Northlake, IL 60164
(312) 562•7400 Telex 72•8463
A Columbia Pictures Industries Company

© 1982 D. Gottlieb & Co.
All Rights Reserved
Printed in U.S.A.