Thank You for downloading this manual. I hope it helps you resolve any issues you have had with your game.

This manual was purchased, and scanned by Basement Arcade Associates, www.basementarcade.com and is offered for free download at our site.

This PDF is not to be distributed on any collection CD / DVD, nor is to be linked to via any other internet site without permission from us. Likewise it is not to be distributed from any other site without our permission.

Abiding by these requests, will insure the continuing support of new manuals added to our site.

All original copyrights held by their original owners, This PDF copyrighted Basement Arcade Associates.

-=Mark=-

www.basementarcade.com

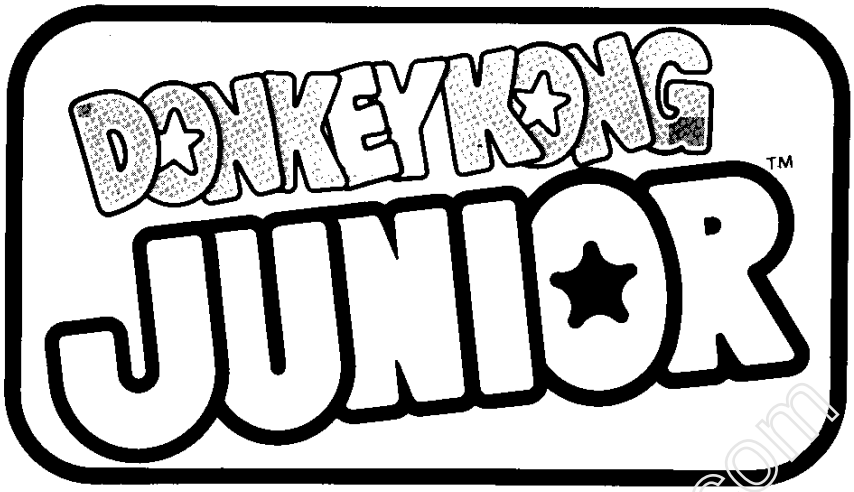

OPERATION MANUAL

MODEL NO. DJR1-UP

2 P.C.BOARDS TYPE

Nintendo™

www.basementarcade.com

www.basementarcade.com

WARNING

This equipment generates, uses and can radiate radio frequency energy and if not installed and used in accordance with the instructions manual, may cause interference to radio communications. As temporarily permitted by regulation it has not been tested for compliance with the limits for Class A computing devices pursuant to Subpart J of Part 15 of FCC Rules, which are designed to provide reasonable protection against such interference. Operation of this equipment in a residential area is likely to cause interference in which case the user at his own expense will be required to take whatever measures may be required to correct the interference.

C O N T E N T S

1. CAUTIONS 1

2. SPECIFICATIONS 2

3. INSTALLATION OF THE MACHINE

   (1) Cautions on installation 3

   (2) Earthing of machine 3

4. MAINTENANCE AND INSPECTION

   (1) Dismounting of front screen 4

   (2) Dismounting of operation panel 4

5. POINTS AND METHODS OF ADJUSTMENT

   (1) CPU P.C.Board 5

   (2) Adjustment of Semi-Fixed Resistors 6

   (3) Video Monitor 7

6. WIRING AND CONNECTION 8

7. NAME OF EACH PART

   (1) Body 9

   (2) Operation Panel Assembly 11

8. PARTS LIST 12

www.basementarcade.com

C A U T I O N S

1. P.C.Board should not be exposed direct to the sun. Direct sunshine is very harmful to LSI(memory element).

2. P.C.Board to be stored or transported should be wrapped by a conductive pouch or aluminum foil, because LSI and IC used in the machine are semiconductor integrated circuits of which basic element is MOS-FET.

3. When images on the Video Monitor screen are disturbed by powerful noise or other electrical causes, turn the main power off once and then on again.

2. SPECIFICATIONS

Power Consumption	:	118W
Size	:	600(W) × 850(D) × 1700(H)mm.
Weight	:	100 Kgs.
Number of Player	:	1 or 2 person(s)
Number of Junior	:	3 ~ 6 (Adjustable)
Accessories	:	Operation Manual : 1 copy
		Key for Back Door : 2 pcs.
		Key for Coin Box Door : 2 pcs.
		Fuse : 4 pcs.
		100~120V : 5A × 1, 4A × 2, 0.3A × 1
		220~240V : 4A × 2, 3A × 1, 0.3A × 1

NOTE: Specifications are subject to change for improvement without notice.

www.basementarcade.com

3. INSTALLATION OF THE MACHINE

3-1 Cautions on installation

(1) The power cord of the machine should not be connected to a wall outlet together with large load unit(s) such as motor, cooler,etc.

(2) Turn the power off before setting and removing the P.C. Board and connectors. Carefully handle them.

(3) Do not touch IC, LSI and other electronic parts on P.C. Board. Do not use a tester or the like on them. (They may be damaged by the inner voltage of the instruments.)

(4) When exchanging a fuse, use a new one of the prescribed capacity.

(5) The machine should be installed where it is not hot, keeping away from a heating appliance and direct sunshine.

(6) The machine should be installed where it is not wet and dusty.

(7) Do not touch the inside of the video monitor which has high tension units. Inform service station, if necessary.

3-2 Earthing of machine

(1) When the machine is installed in a wet place, it should be grounded to avoid accident by an electric shock.

a) Connect an earthing wire to the earthing terminal of the machine.

b) The opposite end of the earthing wire should be connected to an earthing bar which is firmly inserted into the ground.

(2) Cautions

a) Do not connect the earthing wire to a water pipe, because polyvinyl-choloride pipes are sometimes used in the water lines and, if so, the electronic continuity is cut at the points.

b) Do not connect the earthing wire to the gas pipe absolutely. That is very dangerous.

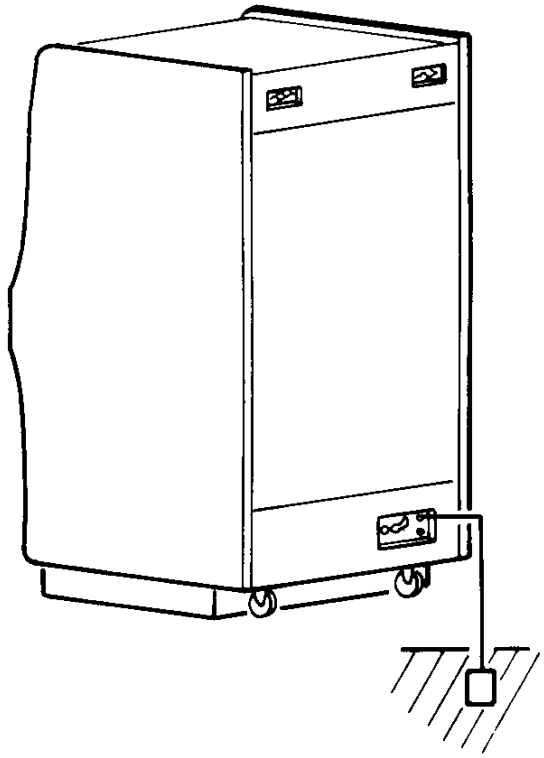

www.thesemiarcade.com

4. MAINTENANCE AND INSPECTION

4-1 Dismounting of front screen

Opening the back door, pull the front screen clamp which is mounted under the top plate. Pull the front screen upward while pushing and then pull toward you.

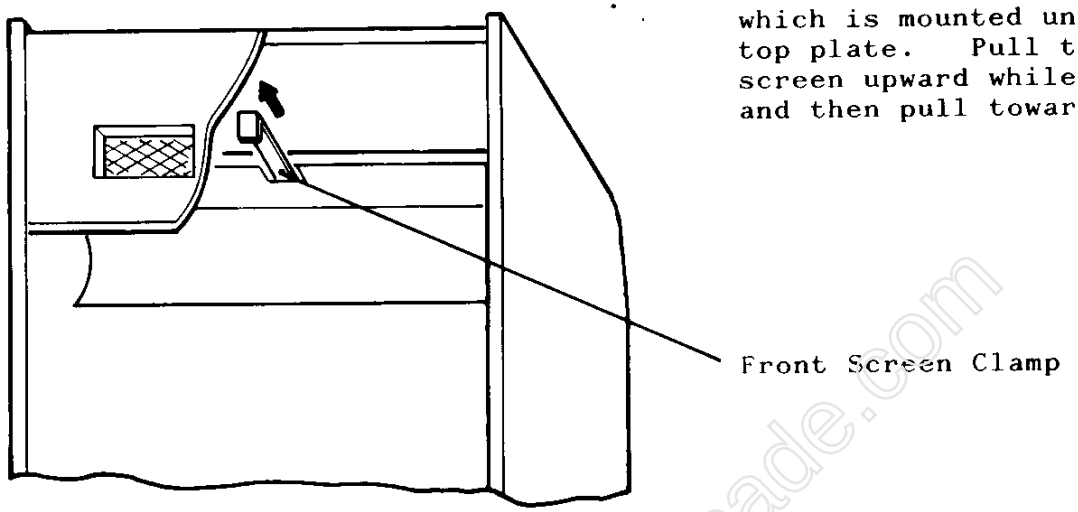

4-2 Dismounting of operation panel

To dismount the operation panel for maintenance or inspection of the Control Unit or Micro Switch, open the front door and unfasten the fastener.

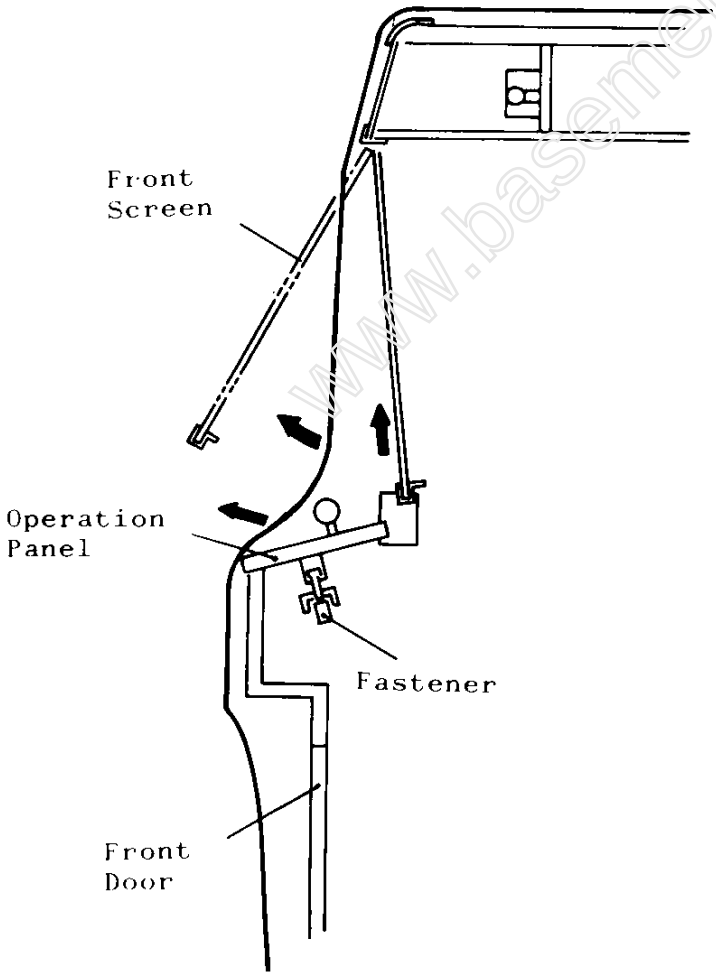

www.basementarcade.com

5. POINTS AND METHODS OF ADJUSTMENT

5-1 CPU P.C.Board

The number of Junior , score level, the number of coin and type of machine can be set with the switches on CPU P.C.Board according to the diagram below.

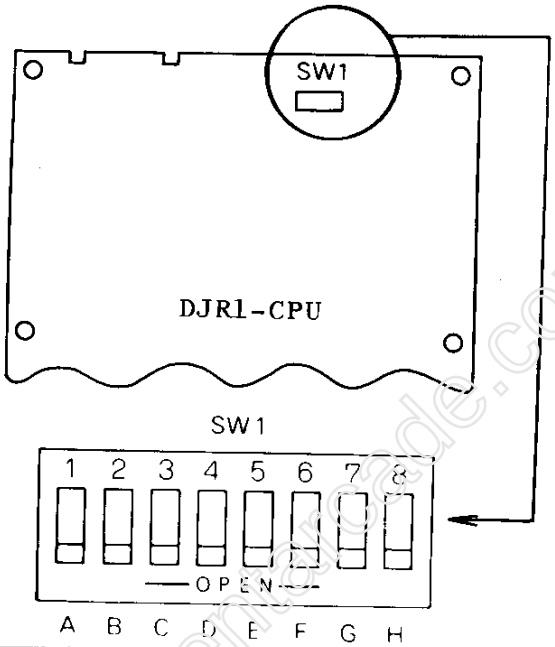

	A	B	C	D	E	F	G	H
Number of Junior								
3	OFF	OFF						
4	ON	OFF						
5	OFF	ON						
6	ON	ON						
Score Level for extra Junior								
10,000 points			OFF	OFF				
15,000 points			ON	OFF				
20,000 points			OFF	ON				
25,000 points			ON	ON				
Coinage								
1 coin /1 play					OFF	OFF	OFF	
1 coin /2 plays					OFF	ON	OFF	
1 coin /3 plays					OFF	OFF	ON	
1 coin /4 plays					OFF	ON	ON	
2 coins/1 play					ON	OFF	OFF	
3 coins/1 play					ON	ON	OFF	
4 coins/1 play					ON	OFF	ON	
5 coins/1 play					ON	ON	ON	
Table/Upright								
Table								OFF
Upright								ON

NOTE : Keep the switch H always at the ON position.

www.basementarcade.com

5-2 Adjustment of Semi-Fixed Resistors

VIDEO P.C. Board

Semi-fixed resistors, VR1 and VR2 on VIDEO P.C. Board are used to adjust video monitor screen.

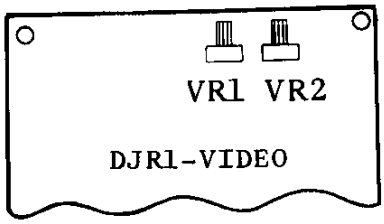

VIDEO P.C.Board

VR1	50KΩ 1/3W top type white knob	Turn right to move image downward.
VR2	50KΩ 1/3W top type white knob	Turn right to move image leftward

www.basementarcade.com

5-3 Video Monitor

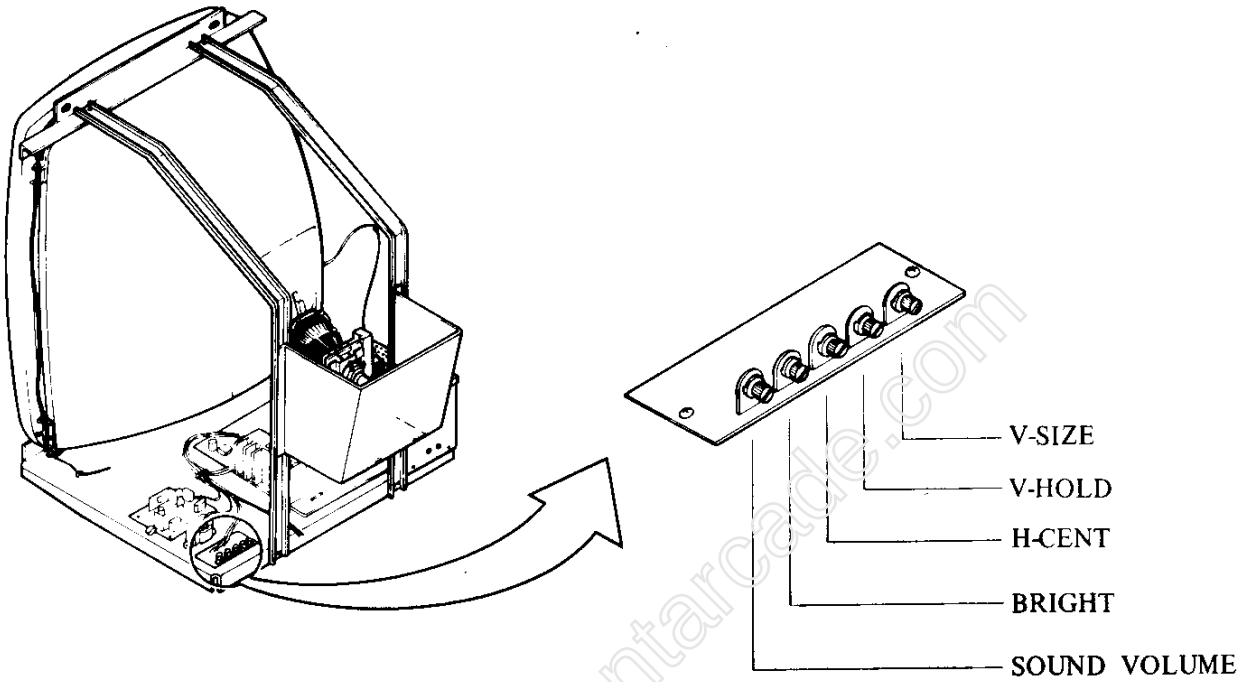

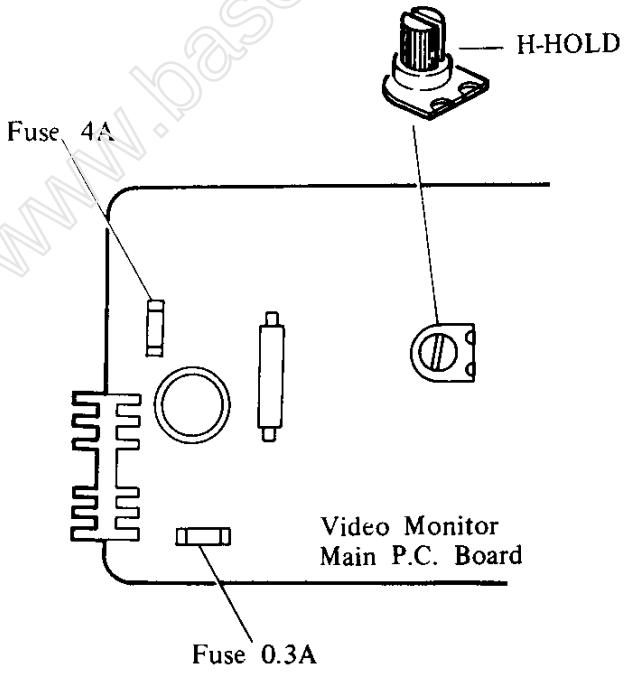

NOTE : Do not touch the inside of the Video Monitor in which many parts are supplied with high tension.

www.basementarcade.com

6. WIRING AND CONNECTION

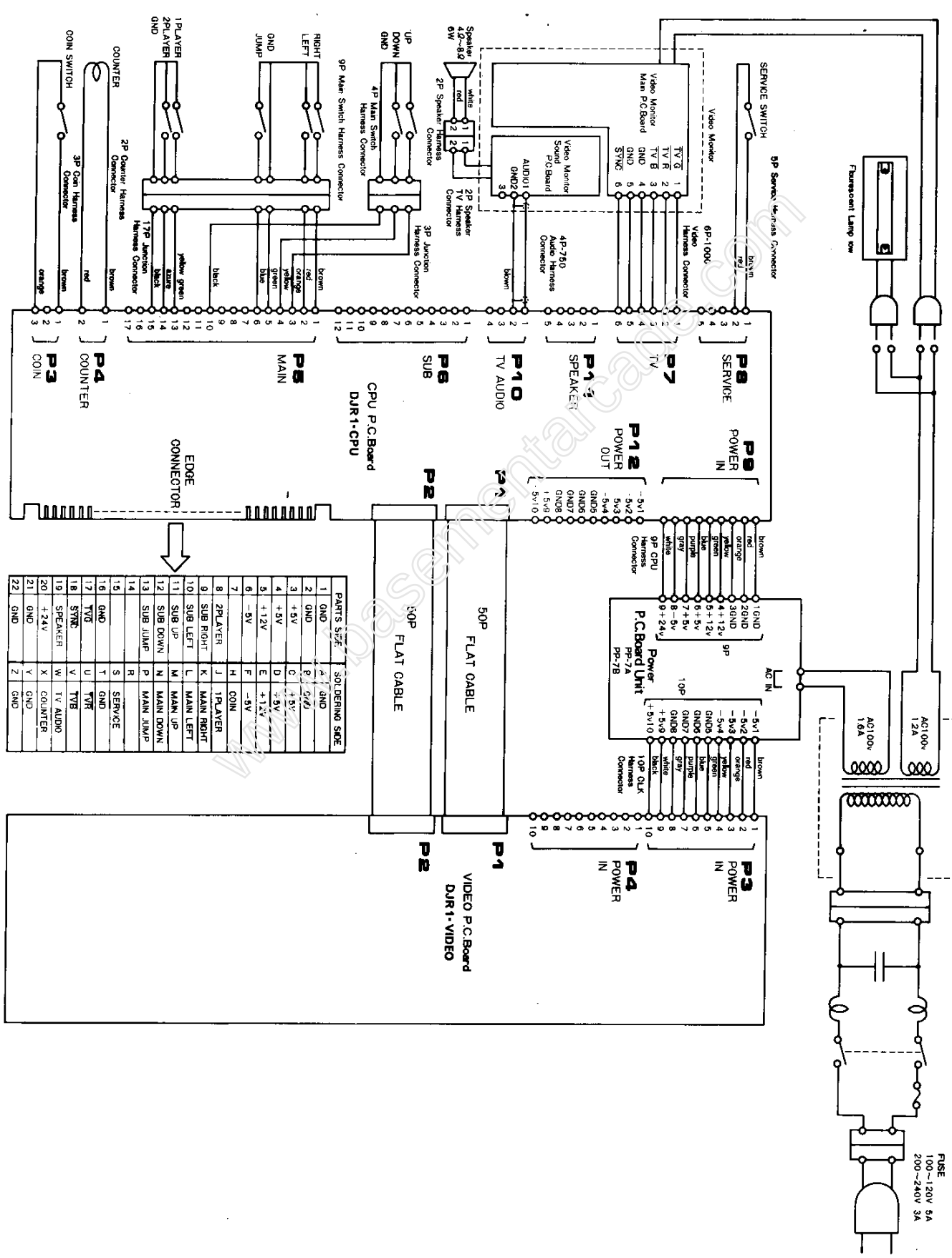

PARTS SIDE		SOLDERING SIDE
1	GND	A GND
2	GND	B GND
3	+5V	C +5V
4	+5V	D +5V
5	+12V	E +12V
6	−5V	F −5V
7		H COIN
8	2PLAYER	J 1PLAYER
9	SUB RIGHT	K MAIN RIGHT
10	SUB LEFT	L MAIN LEFT
11	SUB UP	M MAIN UP
12	SUB DOWN	N MAIN DOWN
13	SUB JUMP	P MAIN JUMP
14		R
15		S SERVICE
16	GND	T GND
17	TVG	U TVR
18	SYNC	V TVB
19	SPEAKER	W TV AUDIO
20	+24V	X COUNTER
21	GND	Y GND
22	GND	Z GND

www.basementarcade.com

7. NAME OF EACH PART

(1) Body

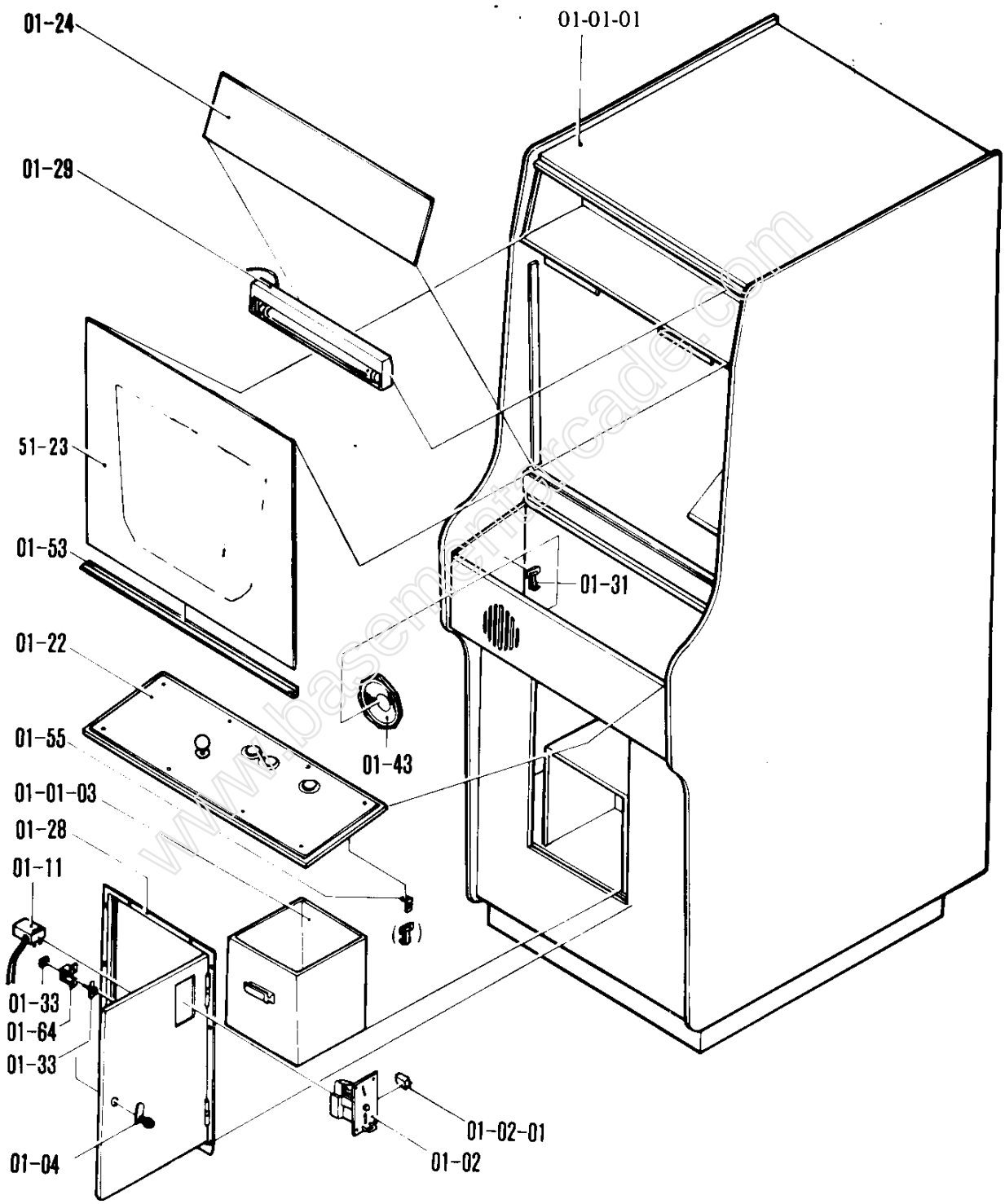

www.basementarcade.com

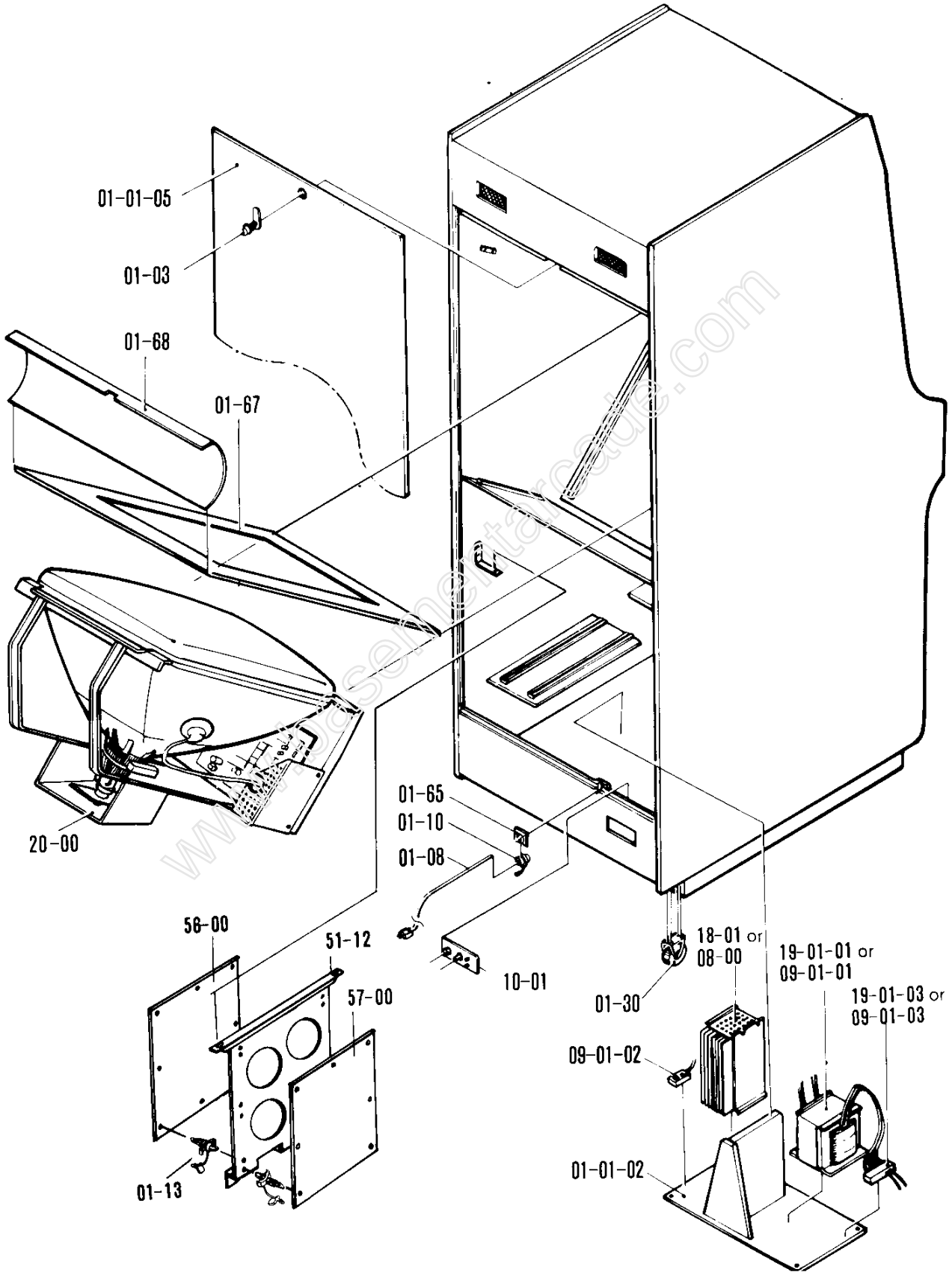
01-01-05
01-03
01-68
01-67
20-00
01-65
01-10
01-08
56-00
51-12
57-00
01-13
10-01
18-01 or
08-00
01-30
19-01-01 or
09-01-01
19-01-03 or
09-01-03
09-01-02
01-01-02

(2) Operation Panel Assembly

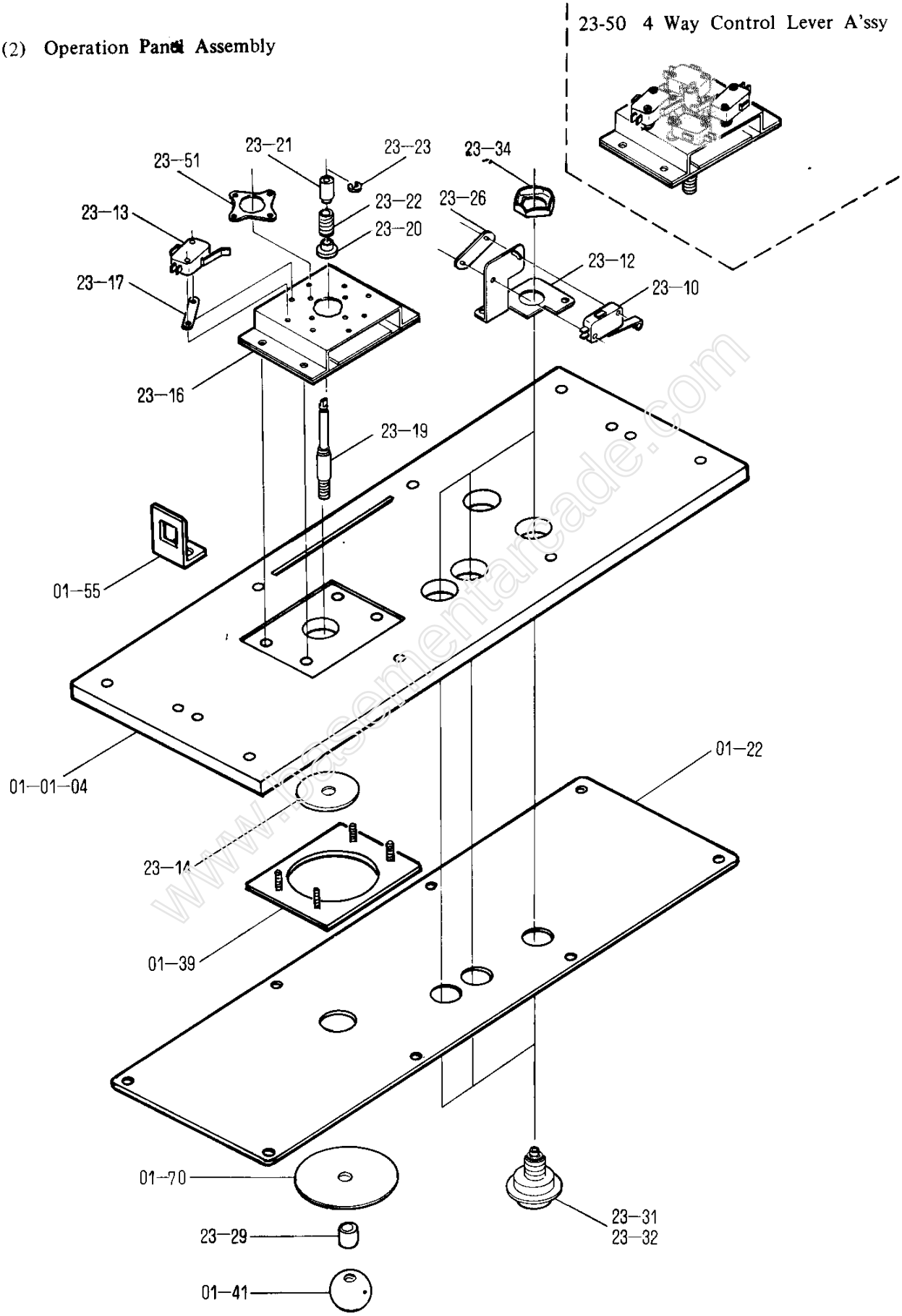

www.freegamearcade.com

8. PARTS LIST

1. DJR-Body

No.	Name of Parts	Q'ty	Remarks	FOB Japan per pc.
DJRU-01-01-01	Body	1		
DJRU-01-01-02	Transformer Base	1		
DJRU-01-01-03	Cash Box	1		
DJRU-01-01-04	Control Lever Ass'y Base	1		
DJRU-01-01-05	Back Door	1		
DJRU-01-02	Coin Selector	1	T	
DJRU-01-02-01	Coin Switch	1	T	
DJRU-01-03	Back Door Lock	1		
DJRU-01-04	Front Door Lock	1		
DJRU-01-08	Power Cord	1		
DJRU-01-10	Strain Relief Bushing	1	T	
DJRU-01-11	Game Counter	1	T	
DJRU-51-12	TKG4 P.C.Board Mounting Bracket	1		
DJRU-01-13	P.C.Board Support	16		
DJRU-01-22	Operation Panel	1		
DJRU-51-23	Front Screen	1		
DJRU-01-24	Name Plate	1		
DJRU-01-28	Front Door Ass'y	1		
DJRU-01-29	Fluorescent Lamp Ass'y	1		
DJRU-01-30	Caster	2		
DJRU-01-31	Operation Panel Ass'y Fastener (A)	2		
DJRU-01-33	Service Switch	1	T	
DJRU-01-39	Control Lever Ass'y Mounting Plate	1		
DJRU-01-41	Control Lever Knob	1		
DJRU-01-43	Speaker	1		
DJRU-01-53	Front Screen Frame (Lower)	1		
DJRU-01-55	Operation Panel Ass'y Fastener (B)	2		
DJRU-01-64	Service Switch Bracket	1		
DJRU-01-65	Strain Relief Bushing Plate	1		
DJRU-01-67	Blind Cardboard (Large)	1		
DJRU-01-68	Blind Cardboard (Small)	1		
DJRU-01-70	Control Knob Plate	1		
DJRU-56-00	VIDEO P.C.Board	1	(DJR1-VIDEO)	
DJRU-57-00	CPU P.C.Board	1	(DJR1-CPU)	
DJRU-08-00	(PP-7A) Power P.C.Board	1	T	
DJRU-18-01	(PP-7B) Power P.C.Board	1	T	

www.basementarcade.com

No.	Name of Parts	Q'ty	Remarks	FOB Japan per pc.
DJRU-09-01-01	(PT-8A) Power Transformer	1		
DJRU-19-01-01	(PT-821B) Power Transformer	1		
DJRU-09-01-02	2P Table Tap	1		
DJRU-09-01-03	Terminal Block	1	(Sexipolar)	
DJRU-19-01-03	Terminal Block	1	(Quadrupolar)	
DJRU-10-01	Power Switch Ass'y	1		
DJRU-13-01	10P CLK Harness Connector	1	T	
DJRU-13-02	2P Counter Harness Connector	1		
DJRU-13-03	9P CPU Harness Connector	1	T	
DJRU-13-04	3P Coin Harness Connector	1		
DJRU-13-05	5P Service Harness Connector	1		
DJRU-13-06	2P Speaker TV Harness Connector	1		
DJRU-13-07	4P-750 Audio Harness Connector	1	T	
DJRU-13-10	9P Main Switch Harness Connector	1		
DJRU-13-11	17P Junction Harness Connector	1		
DJRU-13-12	50P Flat Cable	2	T	
DJRU-13-17	2P Speaker Harness Connector	1		
DJRU-13-28	3P Junction Harness Connector	1		
DJRU-13-29	4P Main Switch Harness Connector	1		
DJRU-13-31	6P-1000 Video Harness Connector	1		
DJRU-20-00	Video Monitor	1	(20-5F)	
DJRU-23-10	Micro Switch	3		
DJRU-23-12	Switch Button Bracket	3		
DJRU-23-13	Control Switch	4	T	
DJRU-23-14	Blind Plate	1	T	
DJRU-23-16	Bearing Bracket	1	T	
DJRU-23-17	Switch Spacer	4	T	
DJRU-23-19	Schaft	1	T	
DJRU-23-20	Spring Stopper	1	T	
DJRU-23-21	Switch Collar	1	T	
DJRU-23-22	Lever Spring	1	T	
DJRU-23-23	E Ring 4	1	T	
DJRU-23-26	Nut Plate	3		
DJRU-23-29	Control Knob Collar	1	T	
DJRU-23-31	Switch Button Ass'y (Blue)	2		
DJRU-23-32	Switch Button Ass'y (Orange)	1		
DJRU-23-34	Pal Nut	3		
DJRU-23-50	4 Way Control Lever Ass'y	1	T	
DJRU-23-51	4 Way Guide Plate	1	T	

www.basementarcade.com

2. VIDEO P.C.Board

No.	Name of Parts	Q'ty	Remarks	FOB Japan per pc.
DJR-56-00	VIDEO P.C.Board	1	Complete Set (TKG4-11-VIDEO)	
DJR-56-01	IC SN74LS00	2	Quadruple 2-Input Positive NAND Gates	
DJR-56-02	IC SN 74LS02	3	Quadruple 2-Input Positive Nor Gates	
DJR-56-03	IC SN74LS04	6	Hex Inverters	
DJR-56-04	IC SN74LS08	1	Quadruple 2-Input AND Gate	
DJR-56-05	IC SN74LS10	1	Tri 3 Input NAND Gate	
DJR-56-06	IC SN74LS20	4	Dual 4-Input Positive NAND Gate	
DJR-56-07	IC SN74LS30	1	8-Input Positive NAND Gate	
DJR-56-08	IC SN74LS32	1	Quadruple 2-Input Positive or Gate	
DJR-56-09	IC SN74LS74	4	Dual D-Type Edge-Triggered Flip-Flop w/Set and Reset	
DJR-56-10	IC SN74LS86	7	Quadruple 2-Input Executive OR Gate	
DJR-56-11	IC SN74LS109	1	Dual J-K Positive Edge-Triggered Flip-Flops with Preset and Clear	
DJR-56-12	IC SN74LS123	2	Dual Retriggerable Single Shot	
DJR-56-13	IC SN74LS139	1	Dual 2-to 4-Line Decoder/Demultiplexer	
DJR-56-14	IC SN74LS157	14	Quadruple 2-Line to 1-Line Data	
DJR-56-15	IC SN74LS161	4	Synchronous Presettable 4-Bit Binary Counter w/Direct Reset	
DJR-56-16	IC SN74LS163	2	4-Bit Binary Counter with Synchronous clear	
DJR-56-17	IC SN74LS174	1	Hex D-Type Flip-Flop w/Reset RAM	
DJR-56-18	IC SN74LS175	2	Quadruple D-Type Flip-Flop w/Reset	
DJR-56-19	IC SN74LS245	2	Octal 3-State Bus Transceivers	
DJR-56-20	IC SN74LS273	4	Octal D-FFS	
DJR-56-21	IC SN74LS283	8	4 Bit Binary Full Adder	
DJR-56-22	IC SN74LS299	6	8 Bit Bidirectional Universal Shift/Storage	
DJR-56-23	IC SN74LS367	2	Hex Bus Driver w/3 State Output	
DJR-56-24	IC SN74LS373	2	Octal 3-State D-Latches	
DJR-56-25	IC SN74LS377	1	Octal D-Type Flip-Flops	
DJR-56-26	IC SN74S161	3	Schotkey 4-Bit Binary Counter with Direct Clear	
DJR-56-27	IC MB10105	1	Triple 2-3-2-Input OR/NOR Gates	
DJR-56-28	IC MB10116	1	Triple Line Receivers	
DJR-56-29	IC MB10124	4	Quadruple TTL-to-ECL Translators	
DJR-56-30	IC MB10125	3	Quadruple ECL-to-TTL Translators	
DJR-56-31	IC MB10136	1	Universal Hexadecimal Counter	
DJR-56-32	IC 2716	4	2048 x 8 Bit EP-ROM	
DJR-56-33	IC MB7074	2	ECL-RAM (MBM10422) with Radiator Fin	

www.basementtapecatalog.com

No.	Name of Parts	Q'ty	Remarks	FOB Japan per pc.
DJR-56-34	IC 2732	2	4096 x 8 Bit EP-ROM	
DJR-56-35	IC MB93419	1	64 x 9 Bipolar RAM	
DJR-56-36	IC MB8114	2	1024 x 4-Bit Static MOS RAM	
DJR-56-37	IC MB8148L55	2	1024 x 4-Bit Static RAM	
DJR-56-38	IC 24S10	1	256 x 4-Bit Bipolar P-ROM	
DJR-56-39	Resistor Array	4	RNSA-09P-551J 8-device 510Ω	
DJR-56-40	Resistor Array	1	RNSA-09P-102J 8-device 1kΩ	
DJR-56-41	Variable Resistor	2	50kΩ 1/3W	
DJR-56-42	Resistor (Carbon)	2	10kΩ 1/4W ±5%	
DJR-56-43	Resistor (Carbon)	12	510Ω 1/4W ±5%	
DJR-56-44	Resistor (Carbon)	2	15kΩ 1/4W ±5%	
DJR-56-45	Resistor (Carbon)	4	2.2kΩ 1/4W ±5%	
DJR-56-46	Resistor (Carbon)	2	4.7kΩ 1/4W ±5%	
DJR-56-47	Resistor (Carbon)	1	22kΩ 1/4W±5%	
DJR-56-48	Resistor (Carbon)	1	27kΩ 1/4W ±5%	
DJR-56-49	Resistor (Carbon)	24	1kΩ 1/4W ±5%	
DJR-56-50	Electrolytic Capacitor	2	220μF 16V	
DJR-56-51	Electrolytic Capacitor	2	1μF 50V	
DJR-56-52	Ceramic Capacitor	1	47pF 50V	
DJR-56-53	Ceramic Capacitor	128	0.01μF 50V	
DJR-56-54	Ceramic Capacitor	1	33pF 50V	
DJR-56-55	Ceramic Capacitor	2	10pF 50V	
DJR-56-56	Ceramic Capacitor	4	220pF 50V	
DJR-56-57	Ceramic Capacitor	2	68pF 50V	
DJR-56-58	Ceramic Capacitor	1	330pF 50V	
DJR-56-60	Polyester Film Capacitor	1	1000pF 50V (102kz)	
DJR-56-61	Polyester Film Capacitor	1	0.1μF 50V	
DJR-56-62	Polyester Film Capacitor	1	0.022μF 50V	
DJR-56-63	Transistor	2	2SC1215-R/S/T	
DJR-56-64	Crystal Oscillator	1	61.44MHz (HC-18U)	

www.basementarcade.com

3. CPU P.C.Board

No.	Name of Parts	Q'ty	Remarks	FOB Japan per pc.
DJR-57-00	CPU P.C.Board	1	Complete Set (TKG4-11-CPU)	
DJR-57-01	IC SN74LS00	2	Quadruple 2-Input Positive NAND Gates	
DJR-57-02	IC SN74LS02	2	Quadruple 2-Input Positive NOR Gate	
DJR-57-03	IC SN74LS04	6	Hex Inverters	
DJR-57-04	IC SN74LS08	1	Quadruple 2-Input AND Gates	
DJR-57-05	IC SN74LS32	1	Quadruple 2-Input Positive OR Gate	
DJR-57-06	IC SN74LS74	2	Dual D-Type Edge-Triggered Flip-Flop w/Set and Reset	
DJR-57-07	IC SN74LS86	1	Quadruple 2-Input Exclusive OR Gate	
DJR-57-08	IC SN74LS123	4	Dual Retriggerable Single Shot	
DJR-57-09	IC SN74LS125	1	Quadruple 3 State Bus Buffers	
DJR-57-10	IC SN74LS132	1	Quadruple 2-Input NAND Schmit Triggers	
DJR-57-11	IC SN74LS138	5	3-to-8-Line Decoder/Demultiplexer	
DJR-57-12	IC SN74LS139	1	Dual 2-to-4-Line Decoder/Demultiplexer	
DJR-57-13	IC SN74LS157	1	2-to-1-Line Data Selectors/Multiplexers	
DJR-57-14	IC SN74LS164	2	8-Bit Serial-In Parallel-Out Shift Register	
DJR-57-15	IC SN74LS174	3	Hex D-Type Flip-Flop	
DJR-57-17	IC SN74LS240	4	Octal Buffer/Line Driver/Line Receiver w/3-State	
DJR-57-18	IC SN74LS245	1	Octal 3-State Bus Transceivers	
DJR-57-19	IC SN74LS259	3	8-Bit Addressable Latches	
DJR-57-20	IC SN74LS367	6	Hex Bus Driver w/3 State Output	
DJR-57-21	IC SN74LS373	3	Octal 3-State D-latches	
DJR-57-22	IC SN74LS629	3	Voltage Control Oscillators	
DJR-57-23	IC MB8114	6	1024 x 4-Bit Static MOS RAM	
DJR-57-24	IC 2764	3	8192 x 8-Bit EP ROM	
DJR-57-25	IC Z80A	1	8-Bit Microprocessor	
DJR-57-26	IC 24S10	2	Bipolar ROM 256 x 4-Bit	
DJR-57-27	IC 8257-5	1	DMA Controller	
DJR-57-28	IC 2732	1	4096 x 8-Bit EP ROM	
DJR-57-29	IC MB8884	1	8-Bit Microprocessor	
DJR-57-30	IC MB3614	1	Lower Power Quadruple Operational Amplifiers	
DJR-57-31	IC 3192	1	Custom	
DJR-57-32	IC DAC08CQ	1	8-Bit Digital-to-Analog Converter	
DJR-57-33	IC CD4020B	1	14-Stage Binary Ripple Counter	

www.basementarcade.com

No.	Name of Parts	Q'ty	Remarks	FOB Japan per pc.
DJR-57-34	Transistor	4	2SC1815	
DJR-57-35	Transistor	1	2SC1384-R	
DJR-57-36	Transistor	4	2SC828-P/Q	
DJR-57-37	Transistor	2	2SA564-P/Q/R	
DJR-57-38	Diode	10	IS953	
DJR-57-39	Diode	1	W03B	
DJR-57-40	Dip Switch	1	B-8A	
DJR-57-41	Aluminium Electrolytic Capacitor	2	470μF 16V	
DJR-57-42	Electrolytic Capacitor	1	220μF 16V	
DJR-57-43	Electrolytic Capacitor	1	33μF 16V	
DJR-57-44	Electrolytic Capacitor	3	1μF 50V	
DJR-57-45	Electrolytic Capacitor	1	4.7μF 50V	
DJR-57-46	Electrolytic Capacitor	2	3.3μF 50V	
DJR-57-47	Electrolytic Capacitor	15	10μF 16V	
DJR-57-48	Electrolytic Capacitor	2	100μF 16V	
DJR-57-49	Electrolytic Capacitor	3	47μF 16V	
DJR-57-50	Ceramic Capacitor	3	0.068μF 25V	
DJR-57-51	Ceramic Capacitor	82	0.01μF 50V	
DJR-57-52	Ceramic Capacitor	1	0.022μF 25V	
DJR-57-53	Ceramic Dapacitor	2	22pF 50V	
DJR-57-54	Ceramic Capacitor	2	0.47μF 50V	
DJR-57-56	Polyester Film Capacitor	1	0.01μF 50V	
DJR-57-57	Polyester Film Capacitor	1	0.22μF 50V	
DJR-57-58	Polyester Film Capacitor	1	0.022μF 50V	
DJR-57-59	Polyester Film Capacitor	1	0.0047μF 50V	
DJR-57-60	Polyester Film Capacitor	2	0.12μF 50V	
DJR-57-61	Polyester Film Capacitor	1	0.056μF 50V	
DJR-57-62	Tantalum Capacitor	3	10μF 16V	
DJR-57-63	Tantalum Capacitor	1	4.7μF 16V	
DJR-57-64	Tantalum Capacitor	2	22μF 16V	
DJR-57-65	Series Resistor Array	3	1kΩ PNSA-09P-102J	
DJR-57-66	Parallel Resistor Array	6	68Ω PNSB-08P-680J	
DJR-57-67	Series Resistor Array	1	4.7kΩ PNSB-09P-472J	
DJR-57-68	Resistor (Carbon)	6	47kΩ 1/4W ±5%	
DJR-57-69	Resistor (Carbon)	1	2kΩ 1/4W ±5%	
DJR-57-70	Resistor (Carbon)	6	4.7kΩ 1/4W ±5%	
DJR-57-71	Resistor (Carbon)	9	10kΩ 1/4W ±5%	
DJR-57-72	Resistor (Carbon)	7	100kΩ 1/4W ±5%	
DJR-57-73	Resistor (Carbon)	15	1kΩ 1/4W ±5%	
DJR-57-74	Resistor (Carbon)	2	5.6kΩ 1/4W ±5%	

www.basementarcade.com

No.	Name of Parts	Q'ty	Remarks	FOB Japan per pc.
DJR-57-75	Resistor (Carbon)	1	120Ω 1/4W ±5%	
DJR-57-76	Resistor (Carbon)	1	150Ω 1/4W ±5%	
DJR-57-77	Resistor (Carbon)	2	20KΩ 1/4W ±5%	
DJR-57-78	Resistor (Carbon)	1	150KΩ 1/4W ±5%	
DJR-57-79	Resistor (Carbon)	1	30KΩ 1/4W ±5%	
DJR-57-80	Resistor (Carbon)	1	43KΩ 1/4W ±5%	
DJR-57-81	Resistor (Carbon)	1	13KΩ 1/4W ±5%	
DJR-57-83	Resistor (Carbon)	5	68Ω 1/4W ±5%	
DJR-57-84	Resistor (Carbon)	7	330Ω 1/4W ±5%	
DJR-57-85	Resistor (Carbon)	2	33kΩ 1/4W ±5%	
DJR-57-86	Resistor (Carbon)	4	220Ω 1/4W ±5%	
DJR-57-87	Resistor (Carbon)	5	470Ω 1/4W ±5%	
DJR-57-88	Resistor (Carbon)	1	680Ω 1/4W ±5%	
DJR-57-89	Resistor (Carbon)	4	100Ω 1/4W ±5%	
DJR-57-90	Resistor (Carbon)	1	200Ω 1/4W ±5%	
DJR-57-91	Crystal Oscillator	1	HC-18U-182 (6.000MHz)	

www.basementarcade.com

4. Power P.C.Board

No.	Name of Parts	Q'ty	Remarks	FOB Japan per pc.
DJR-18-01	(PP-7B) Power P.C.Board	1	Complete Set	
DJR-18-02	Transistor	1	2SC2555	
DJR-18-03	Transistor	2	2SA817	
DJR-18-04	Transistor	1	2SC2535	
DJR-18-05	Transistor	1	2SA1015	
DJR-18-06	Fast Recovery Center Tap Diode	1	CTU-2S	
DJR-18-07	Shot Key Diode	2	CTB33S	
DJR-18-08	Silicon Rectifier Diode	1	S4VB40 4A 400VW	
DJR-18-09	Silicon Rectifier Diode	1	1B4B41	
DJR-18-10	Hybrid IC	2	3D-1001	
DJR-18-11	3 Terminals Regulators	1	7824	
DJR-18-12	3 Terminals Regulators	1	7812	
DJR-18-13	Thyristors	1	5P4M	
DJR-18-14	Thyristors	1	03P05M	
DJR-18-15	Diode	4	1S954	
DJR-18-16	Diode	4	10DF-4	
DJR-18-17	Photo Coupler	1	PC614	
DJR-18-18	Zener Diode	1	05Z5.6U	
DJR-18-19	Zener Diode	1	05Z5.1L	
DJR-18-20	Zener Diode	1	05Z5.6Z	
DJR-18-21	Ceramic Capacitor	3	DE0707B471K2K 470pF2KV	
DJR-18-22	Ceramic Capacitor	1	0.1MF 50V	
DJR-18-23	Film Capacitor	3	MDD2J473M 0.047MF 630VW	
DJR-18-24	Film Capacitor	2	0.01MF 50V	
DJR-18-25	Film Capacitor	2	1000pF 50V	
DJR-18-26	Aluminum Electrolytic Capacitor	1	1000MF 50V	
DJR-18-27	Aluminum Electrolytic Capacitor	2	47MF 35V	
DJR-18-28	Aluminum Electrolytic Capacitor	7	47MF 16V	
DJR-18-29	Aluminum Electrolytic Capacitor	4	3300MF 10V	
DJR-18-30	Aluminum Electrolytic Capacitor	2	100MF 25V	
DJR-18-31	Aluminum Electrolytic Capacitor	5	10MF 16V	
DJR-18-32	Aluminum Electrolytic Capacitor	2	330MF 200V	
DJR-18-33	Aluminum Electrolytic Capacitor	1	1000MF 25V	
DJR-18-34	Resistor (Coil Winding)	1	20 OHM 2W	
DJR-18-35	Resistor (Carbon)	5	1K OHM ¼W±5%	
DJR-18-36	Resistor (Carbon)	8	51 OHM ¼W±5%	
DJR-18-37	Resistor (Carbon)	6	12 OHM ½W±5%	
DJR-18-38	Resistor (Carbon)	1	470 OHM ¼W±5%	
DJR-18-39	Resistor (Carbon)	1	22 OHM ½W±5%	
DJR-18-40	Resistor (Carbon)	2	20K OHM ½W±5%	

www.basementarcade.com

No.	Name of Parts	Q'ty	Remarks	FOB Japan per pc.
DJR-18-41	Resistor (Carbon)	1	100 OHM ½W	
DJR-18-42	Resistor (Cement)	1	20 OHM 5W	
DJR-18-43	Resistor (Metal Oxide)	1	510 OHM 3W	
DJR-18-44	Variable Resistor	2	50K OHM GF06P	
DJR-18-45	Variable Resistor	2	2K OHM GF06P	
DJR-18-46	Shunt Resistor	2	5m OHM	
DJR-18-47	SC Coil	1	SC-02	
DJR-18-48	SF Coil	2	100MH 5A	
DJR-18-49	SF Coil	2	800MH 2A	
DJR-18-50	Oscillator Transformer	1	EC-35 Type 3D-0097	
DJR-18-51	Oscillator Transformer	1	EI-30 Type 3D-0097	
DJR-18-52	Oscillator Transformer	2	EE-16 Type 3D-1000	
DJR-18-53	Fuse Element	1	FGMB 4A 125V NR Type	

www.basementarcade.com

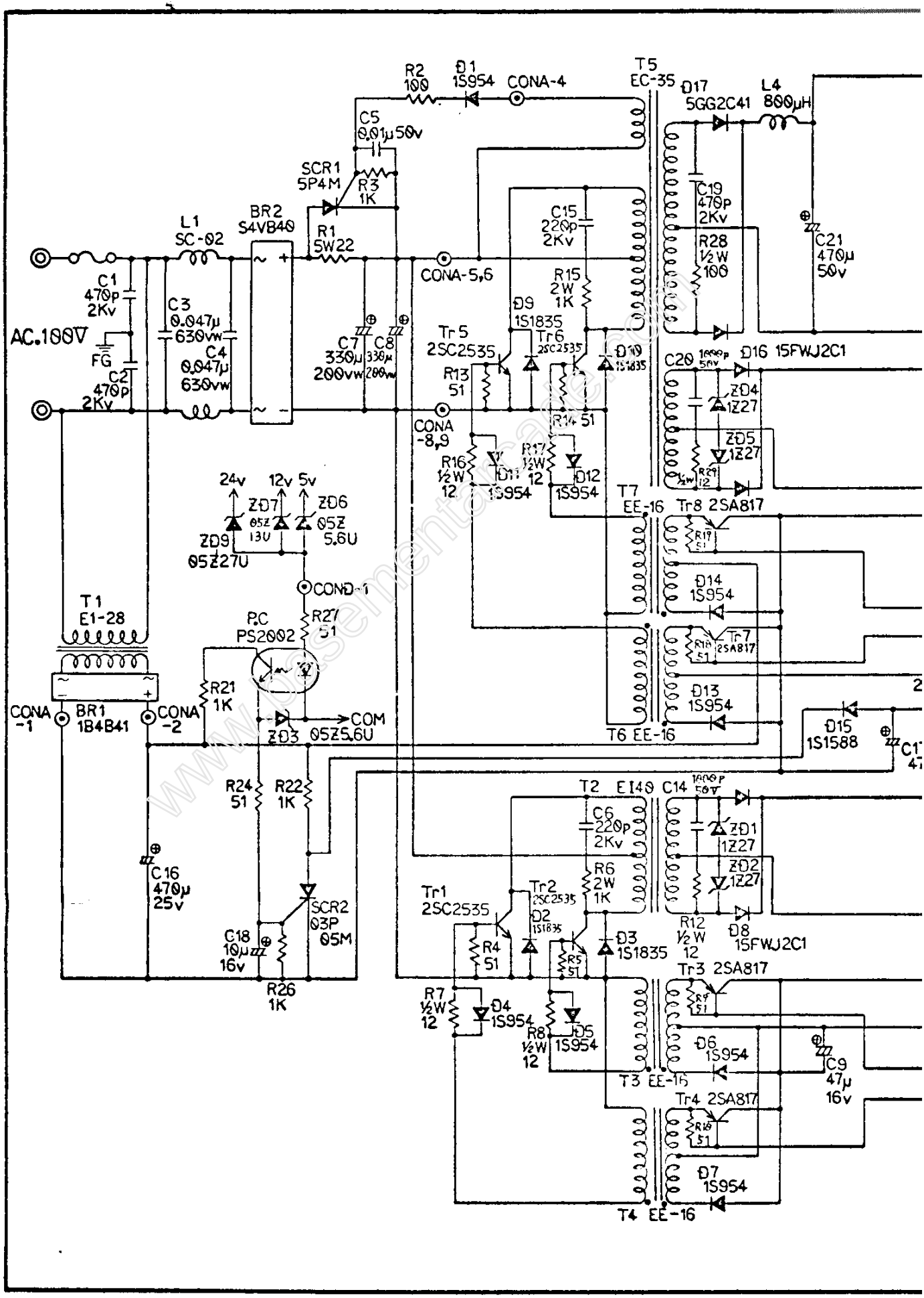
R2 100
D1 1S954
CONA-4
T5 EC-35
D17 5GG2C41
L4 800μH
C5 0.01μ 50v
SCR1 5P4M
R3 1K
BR2 S4VB40
L1 SC-02
R1 5W22
C15 220p 2Kv
C19 470p 2Kv
R28 ½W 100
C21 470μ 50v
CONA-5,6
R15 2W 1K
D9 1S1835
C1 470p 2Kv
C3 0.047μ 630vw
C4 0.047μ 630vw
AC.100V
FG
C2 470p 2Kv
C7 330μ 200vw
C8 330μ 200vw
Tr5 2SC2535
Tr6 2SC2535
D10 1S1835
C20 1000p 50v
D16 15FWJ2C1
R13 51
R14 51
ZD4 1Z27
ZD5 1Z27
CONA -8,9
R16 ½W 12
D11 1S954
R17 ½W 12
D12 1S954
T7 EE-16
Tr8 2SA817
24v
12v
5v
ZD7 05Z 13U
ZD6 05Z 5.6U
ZD9 05Z27U
D14 1S954
COND-1
T1 E1-28
P.C PS2002
R27 51
Tr7 2SA817
R21 1K
D13 1S954
CONA -1
BR1 1B4B41
CONA -2
ZD3 05Z5.6U
COM
T6 EE-16
D15 1S1588
R24 51
R22 1K
T2 EI40
C14 1000p 50v
C6 220p 2Kv
ZD1 1Z27
ZD2 1Z27
C16 470μ 25v
R6 2W 1K
Tr1 2SC2535
Tr2 2SC2535
D2 1S1835
SCR2 03P 05M
R12 ½W 12
D8 15FWJ2C1
C18 10μ 16v
R4 51
R5 51
D3 1S1835
Tr3 2SA817
R26 1K
R7 ½W 12
D4 1S954
R8 ½W 12
D5 1S954
D6 1S954
C9 47μ 16v
T3 EE-16
Tr4 2SA817
D7 1S954
T4 EE-16

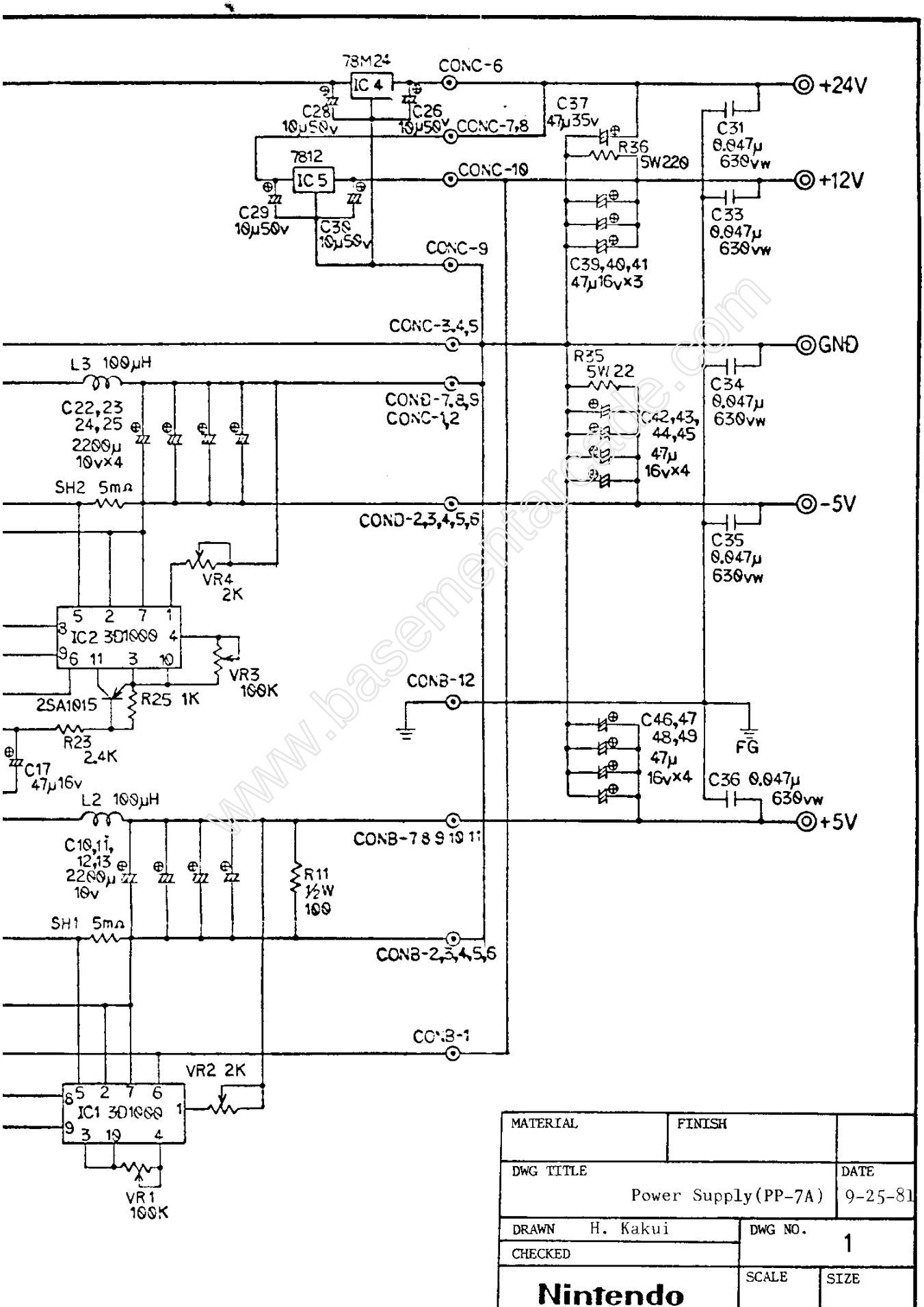

MATERIAL	FINISH	
DWG TITLE Power Supply(PP-7A)		DATE 9-25-81
DRAWN H. Kakui	DWG NO. 1	
CHECKED		
Nintendo	SCALE	SIZE

www.basementarcade.com

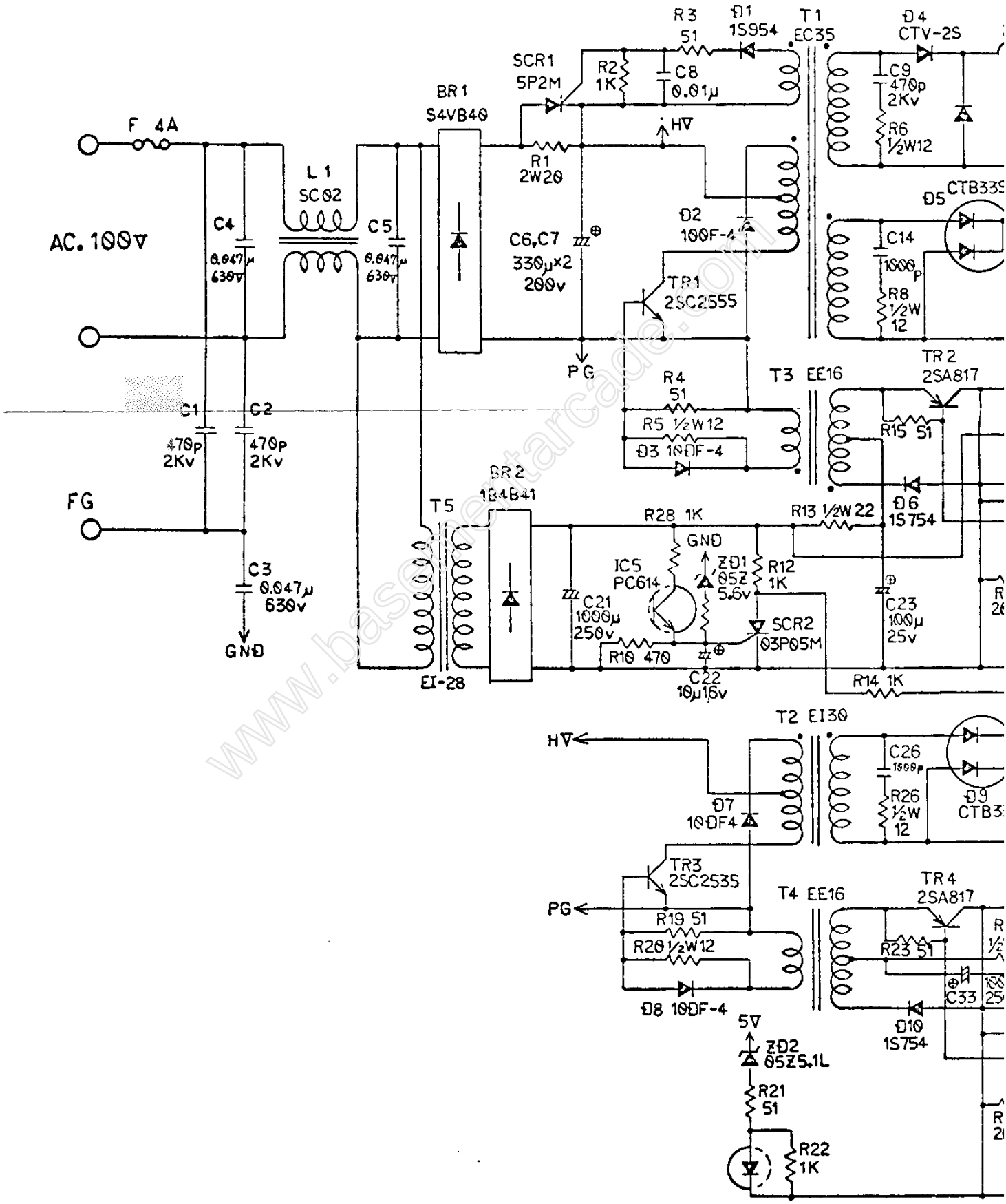
F 4A
AC. 100V
FG
GND
C1
470p
2Kv
C2
470p
2Kv
C3
0.047μ
630v
C4
0.047μ
630V
L1
SC02
C5
0.047μ
630V
BR1
S4VB40
SCR1
5P2M
R1
2W20
R2
1K
R3
51
D1
1S954
C8
0.01μ
T1
EC35
D4
CTV-2S
C9
470p
2Kv
R6
1/2W12
D5
CTB33
C14
1000p
R8
1/2W
12
H∇
D2
10DF-4
C6,C7
330μ×2
200v
TR1
2SC2555
PG
R4
51
R5 1/2W12
D3 10DF-4
T3 EE16
TR2
2SA817
R15 51
D6
1S754
BR2
1B4B41
T5
EI-28
R28 1K
GND
IC5
PC614
ZD1
05Z
5.6v
R12
1K
R13 1/2W 22
C21
1000μ
250v
R10 470
C22
10μ16v
SCR2
03P05M
C23
100μ
25v
R14 1K
T2 EI30
H∇
C26
1000p
R26
1/2W
12
D9
CTB3
D7
10DF4
TR3
2SC2535
PG
R19 51
R20 1/2W12
D8 10DF-4
T4 EE16
TR4
2SA817
R23 51
C33
D10
1S754
5∇
ZD2
05Z5.1L
R21
51
R22
1K

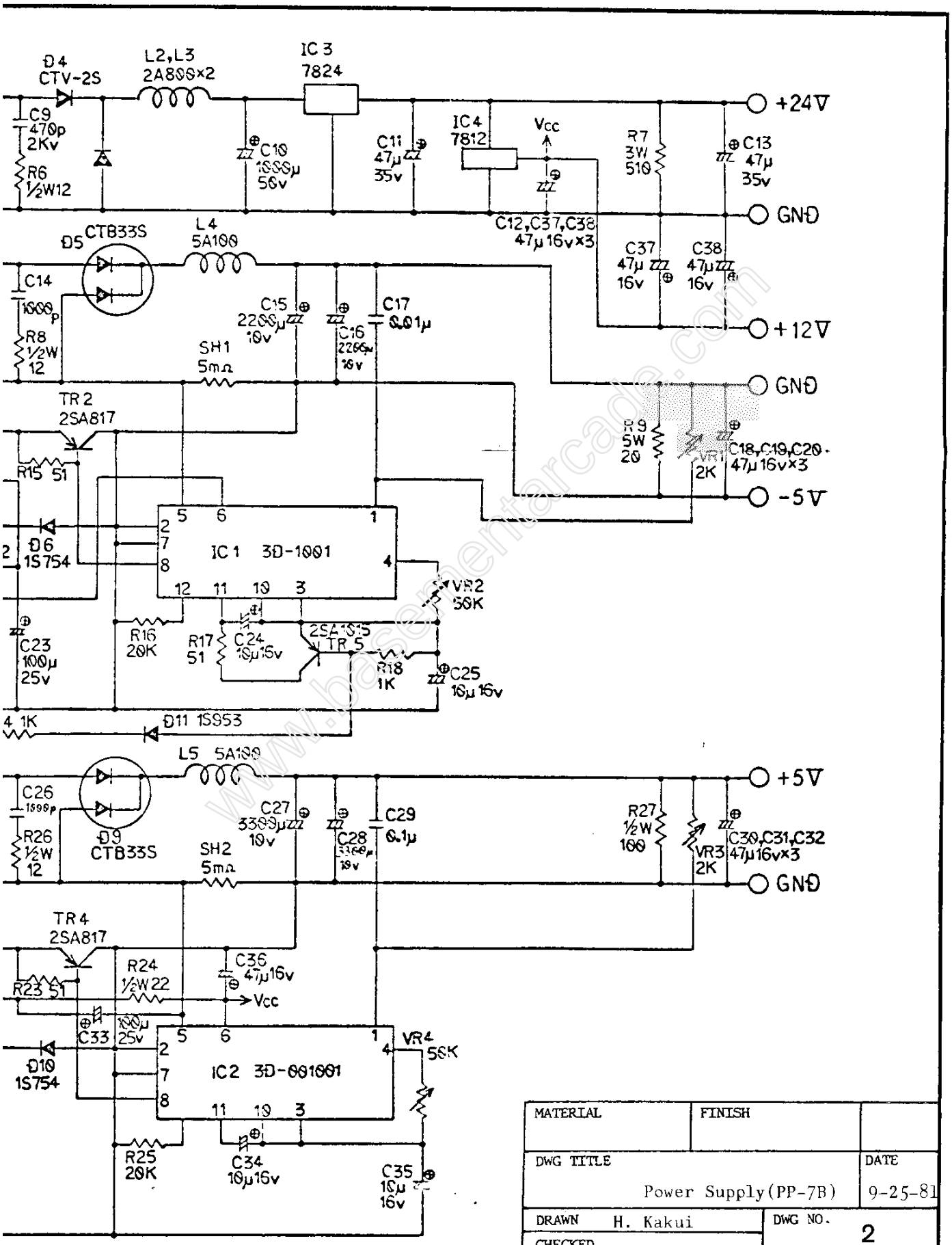

MATERIAL	FINISH	
DWG TITLE		DATE
Power Supply(PP-7B)		9-25-81
DRAWN H. Kakui	DWG NO.	2
CHECKED		
Nintendo	SCALE	SIZE

www.basementarcade.com

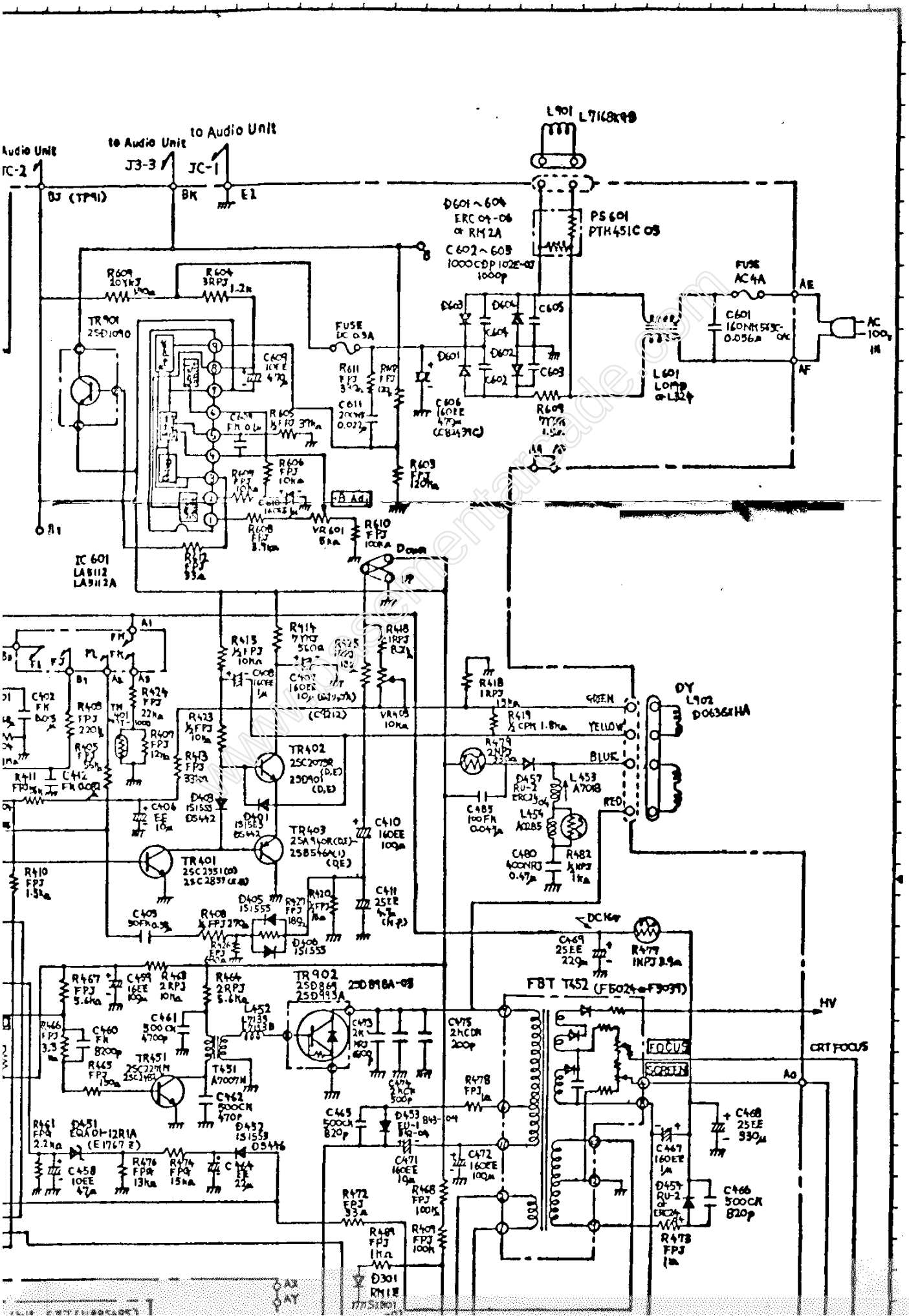
to Audio Unit
to Audio Unit
Audio Unit
JC-2
J3-3
JC-1
BJ (TP91)
BK
E2
L901 L7168K99
D601~604
ERC 09-06
or RM2A
C602~603
1000CDP102E-03
1000p
PS601
PTH451C 05
FUSE
AC4A
AE
AF
AC
100V
1W
C601
160NK553C-
0.056μ
L601
L0MB
or L324
TR901
2SD1090
FUSE
DC 0.3A
R611
R612
C611
0.022μ
C606
160EE
470μ
R609
120kΩ
R610
FPJ
100kΩ
Down
Up
VR601
8kΩ
R608
FPJ
8.7kΩ
IC 601
LA8112
LA9112A
R413
½FPJ
10kΩ
R414
560Ω
R418
1RPJ
15kΩ
R419
½CPH 1.8kΩ
GREEN
YELLOW
BLUE
RED
DY
L902
D0636KHA
TR402
2SC2075R
2SD901
TR401
2SC2351
2SC2837
TR403
2SA940R
2SB546A
C410
160EE
100μ
C411
25EE
4.7μ
R410
FPJ
1.5kΩ
C409
50FK
0.33μ
R408
½FPJ
270kΩ
D405
1S1555
D406
1S1555
R420
½FPJ
1kΩ
R427
FPJ
180kΩ
R479
2NPJ
330Ω
D457
RU-2
ERC34-04
L453
A7018
L454
A0285
C485
100FK
0.047μ
C480
400NRJ
0.47μ
R482
½NPJ
1kΩ
DC1kV
C469
25EE
220μ
R479
1NPJ 8.9kΩ
FBT T452 (F5024~F9039)
HV
FOCUS
SCREEN
CRT FOCUS
A0
TR902
2SD869
2SD993A
2SD816A-03
C475
2HCDR
200p
C473
2K
1600p
C474
2HCDR
500p
R478
FPJ
1kΩ
C468
25EE
330μ
C467
160EE
1μ
D459
RU-2
or
ERC34-04
C466
500CR
820p
R473
FPJ
1kΩ
R467
FPJ
5.6kΩ
C459
16EE
100μ
R468
2RPJ
10kΩ
R464
2RPJ
5.6kΩ
L452
L7133
L7133B
T451
A7007M
C462
500CR
470p
C461
500CR
4700p
C460
FK
8200p
R466
FPJ
3.3kΩ
R465
FPJ
150kΩ
TR451
2SC2274M
2SC3483
R461
FPJ
2.2kΩ
D451
EQA01-12R1A
(E1767Z)
D452
1S1555
D5446
C458
10EE
47μ
R476
FPR
13kΩ
R474
FPJ
15kΩ
C464
EE
22μ
C465
500CR
820p
D453
EU-1
B43-04
C471
160EE
10μ
C472
160EE
100μ
R468
FPJ
100kΩ
R472
FPJ
93Ω
R469
FPJ
1MΩ
R409
FPJ
100kΩ
D301
RM1Z
AX
AY

Capacitor

Ex. : 160 EE M- Rank of Accuracy (List 4)
Variation(List 3)
Bearable Voltage

	C	Y
Oxide	Solid	Coil Winding

	F	N
	Poly-ester	Polypro-pyleine

List 4.

Mark	J	K	M	N
Rank	±5%	±10%	±20%	±30%

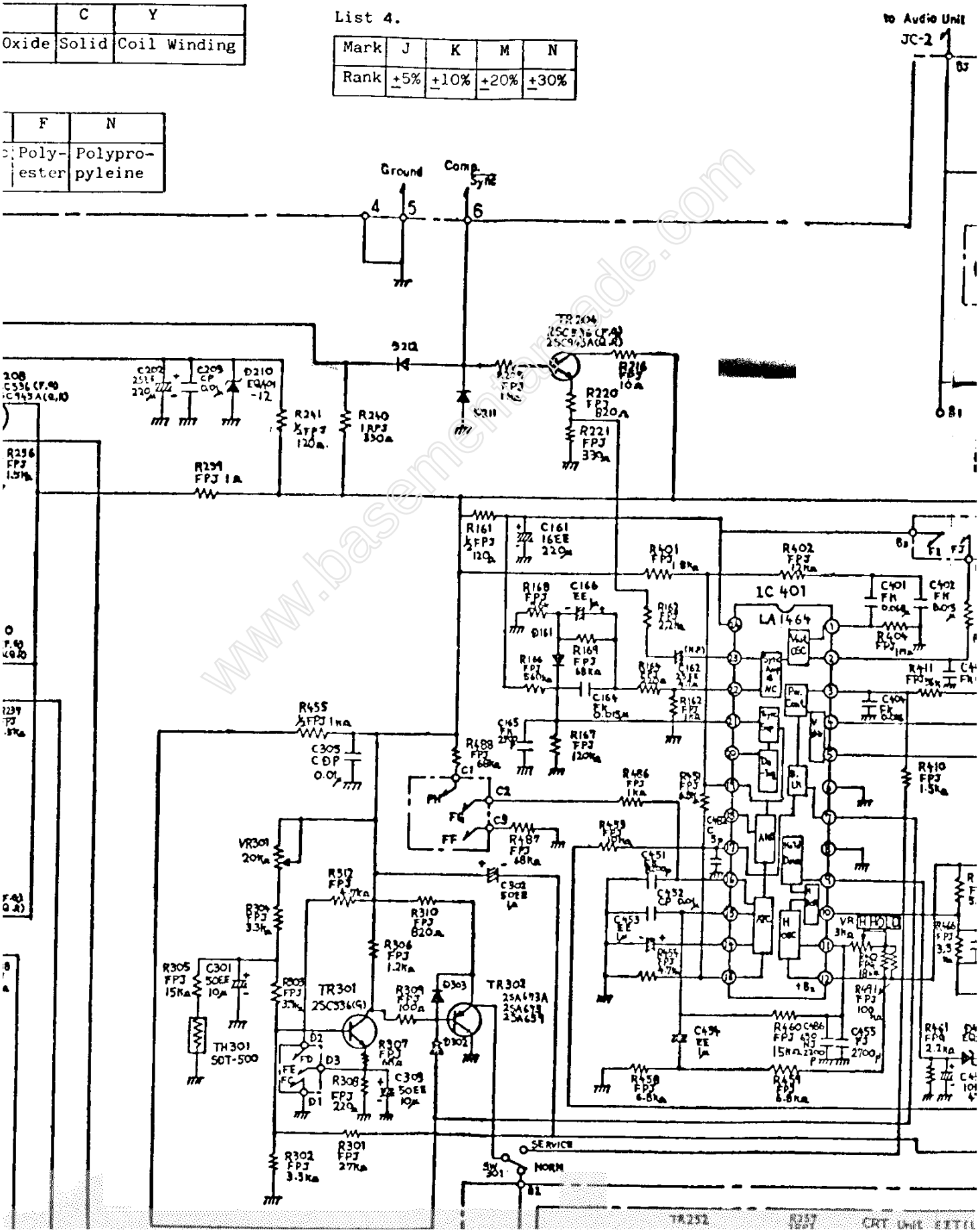

www.basementmade.com

20-EZV(R-B)

NOTE
1. Every resistors without value descriptions are 1/4W
2. Bearable voltage of capacitors are 50V
3. Diodes without descriptions of variation are 1S1555 or 1S2706 or 1S2473 or DS442

Resistors

Ex. : 2 F P J — Rank of Accuracy(*List 1)
- Figure
- Variations(*List 2)
- Value(W)

List 1.

Mark	F	G	J	K
Rank	±1%	±2%	±5%	±10%

List 2.

Mark	F	N	R	C	
Variation	Carbon	Metal	Metal Oxide	Solid	Co

List 3.

Mark	C	EE	F	N
Variation	Ceramic	Electrolytic	Poly-ester	Polypr pylein

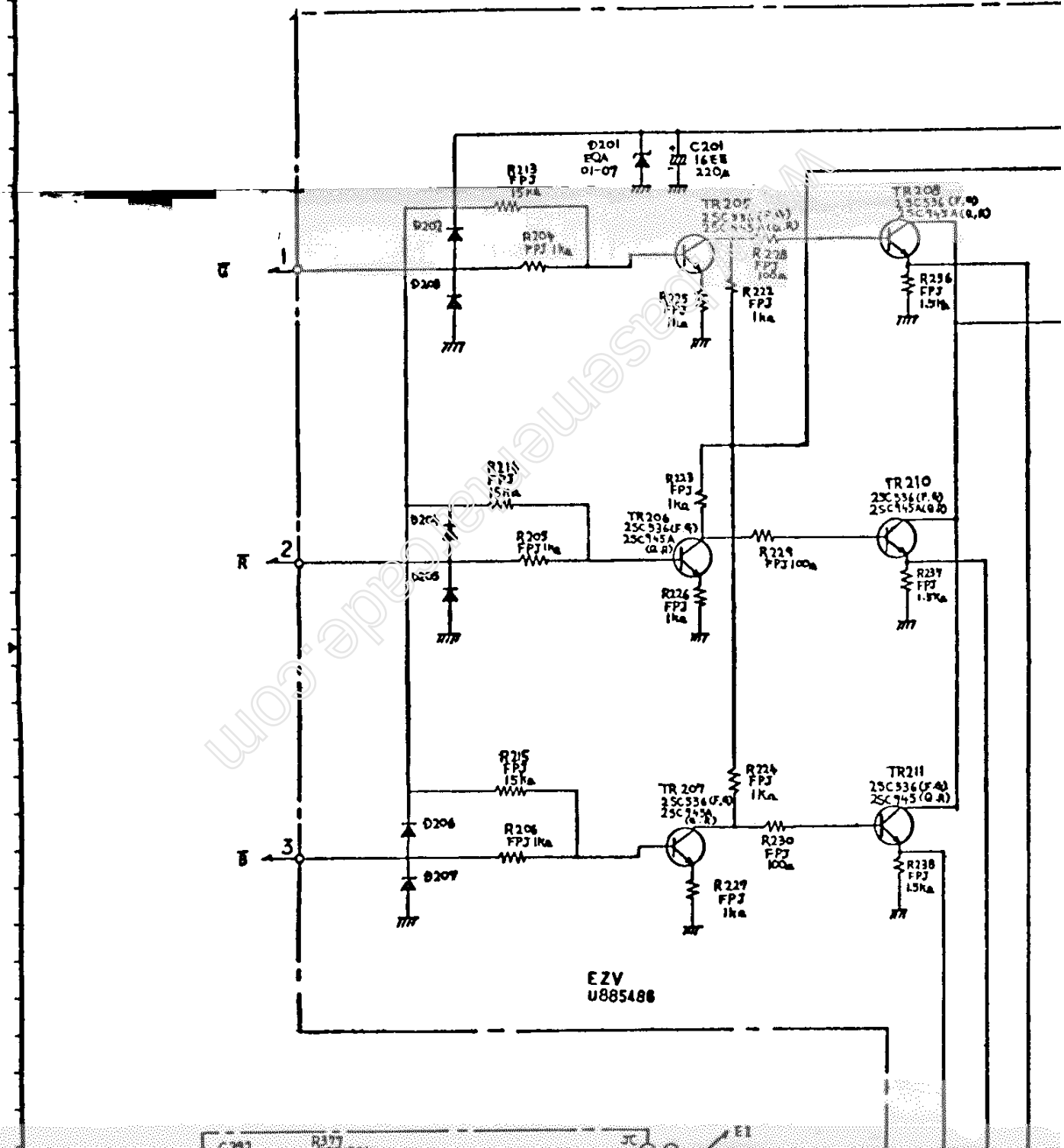

Capacitor

Ex. : 160 EE M- Rank of Accuracy (List 4)
Variation(List 3)
Bearable Voltage

Y
Coil Winding

List 4.

Mark	J	K	M	N
Rank	±5%	±10%	±20%	±30%

pro-
ine

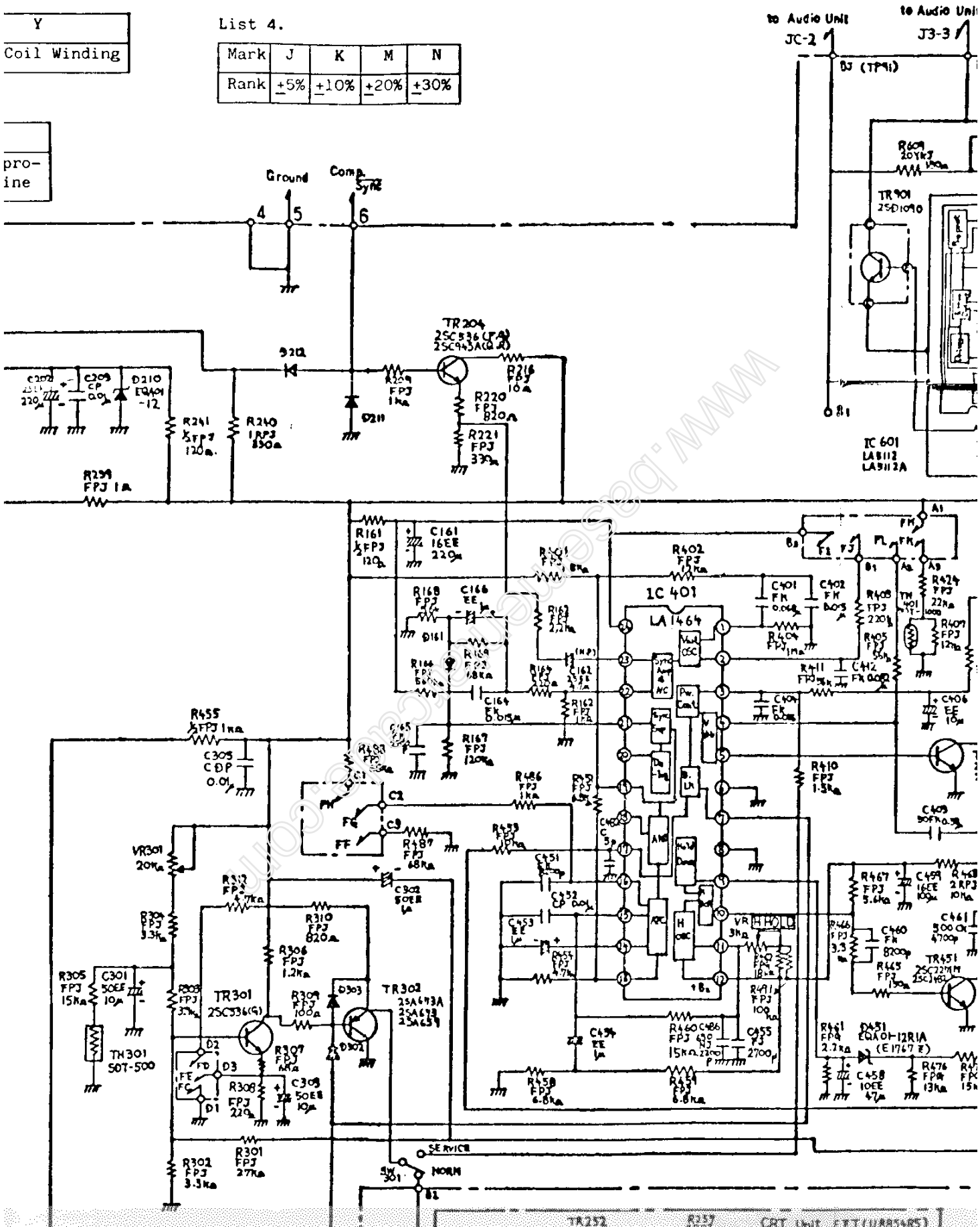

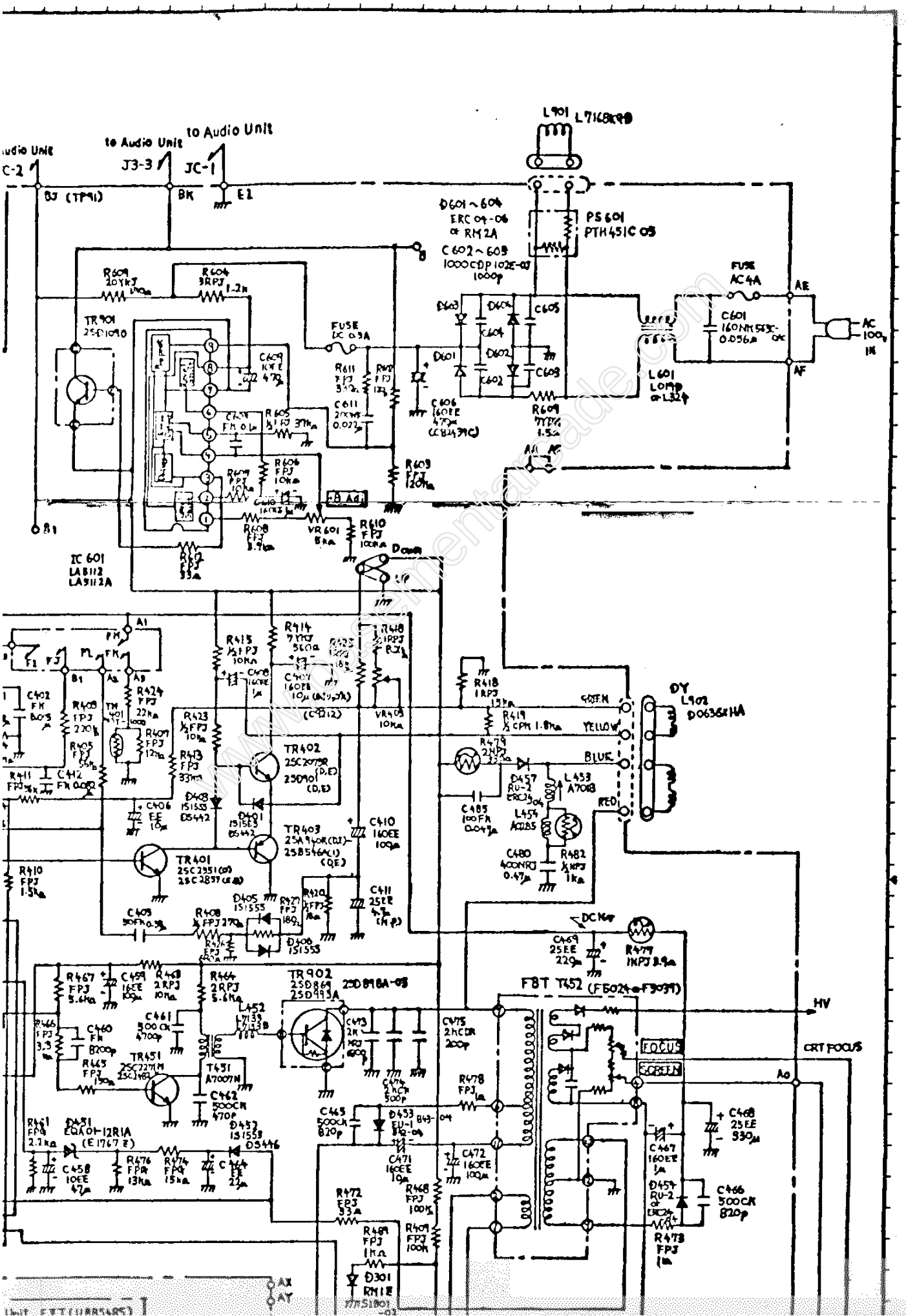
to Audio Unit
to Audio Unit
to Audio Unit
J3-3
JC-1
BJ (TP91)
BK
E2
L901
PS601
PTH451C05
D601~604
C602~603
FUSE
AC4A
AE
AF
AC
100V
1K
C601
L601
TR901
2SD1090
FUSE
DC 0.5A
R611
R612
C611
C606
160EE
R609
R605
R606
R607
R608
VR601
8kΩ
R610
Down
Up
IC601
LA8112
LA9112A
R603
R602
B1
R414
R415
R418
R419
R479
R482
DY
L902
D0636KHA
GREEN
YELLOW
BLUE
RED
TR402
2SC2078R
2SD901
TR401
2SC2351(G)
2SC2837(GR)
TR403
2SA940R(GR)
2SB546A(L)
D401
D405
D406
C410
160EE
100μ
C411
25EE
4.7μ
C409
R408
R410
1.5kΩ
C469
25EE
22μ
R479
1KPJ
DC16V
FBT T452
HV
FOCUS
SCREEN
CRT FOCUS
A0
TR902
2SD869
2SD993A
TR451
2SC2274M
T451
A7007N
R452
L7139
L7133B
C473
C475
2HCDR
200p
C474
C476
500p
R478
FPJ
1kΩ
C465
500CK
820p
D453
EU-1
C471
160EE
10μ
C472
160EE
100μ
R468
FPJ
100kΩ
R469
FPJ
1kΩ
R472
FPJ
33kΩ
D301
RM1E
C468
25EE
330μ
C467
160EE
1μ
D454
RU-2
C466
500CK
820p
R473
FPJ
1kΩ
D451
EQA01-12R1A
(E1767Z)
R461
FPJ
2.7kΩ
C458
10EE
47μ
R476
FPJ
13kΩ
R474
FPJ
15kΩ
C464
EE
22μ
R466
FPJ
3.9kΩ
C460
FK
8200p
R465
FPJ
150kΩ
C461
500CK
4700p
C462
500CK
470p
R467
FPJ
5.6kΩ
C459
16EE
100μ
R468
2RPJ
10kΩ
R464
2RPJ
5.6kΩ
AX
AY

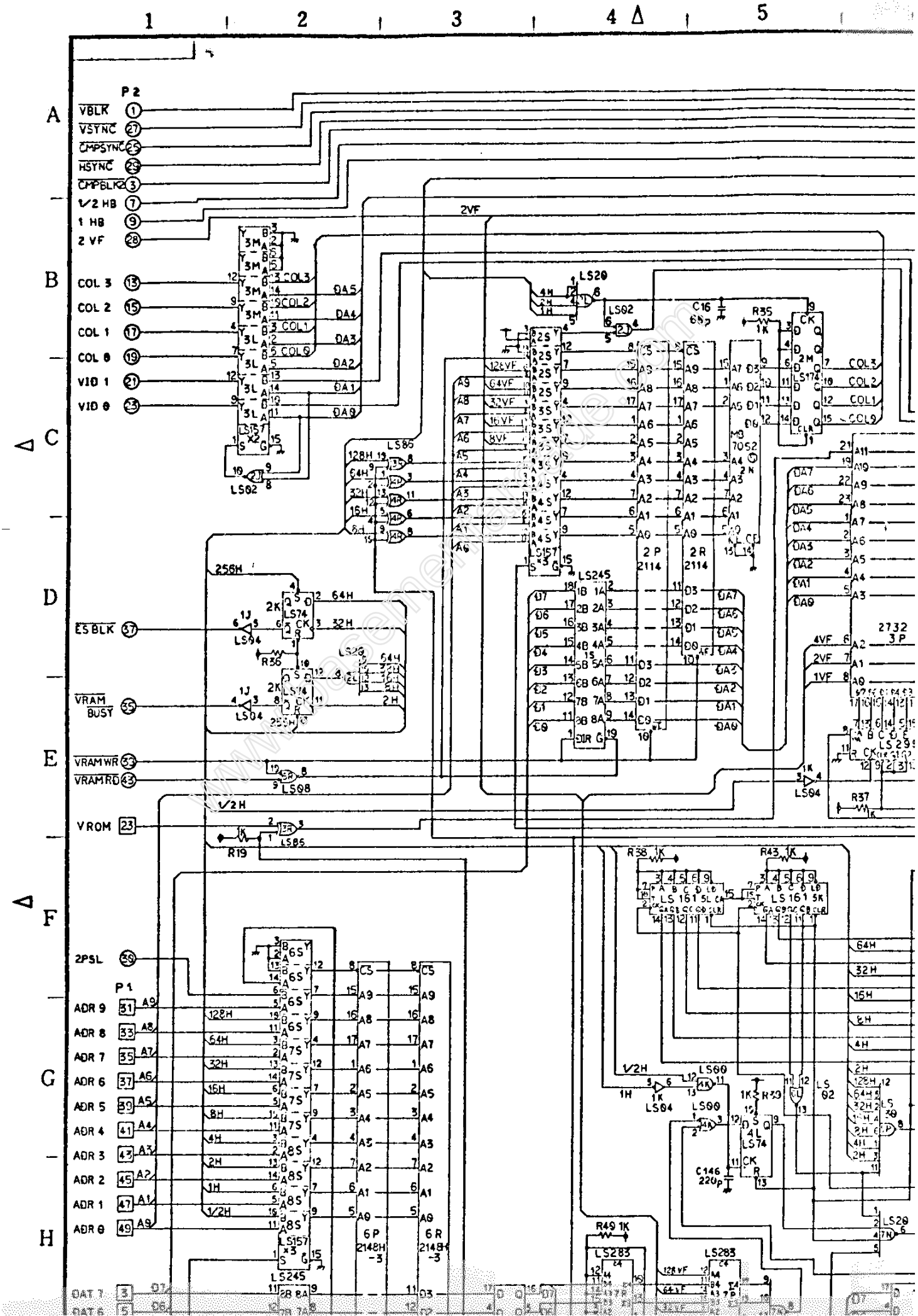
P 2
VBLK
VSYNC
CMPSYNC
HSYNC
CMPBLK
1/2 HB
1 HB
2 VF
COL 3
COL 2
COL 1
COL 0
VID 1
VID 0
ES BLK
VRAM BUSY
VRAMWR
VRAMRD
VROM
2PSL
P 1
ADR 9
ADR 8
ADR 7
ADR 6
ADR 5
ADR 4
ADR 3
ADR 2
ADR 1
ADR 0
DAT 7
DAT 6
LS157
LS245
LS74
LS04
LS08
LS86
LS02
LS20
LS161
LS283
LS00
LS29
2114
2732
6P 2148H -3
6R 2148H -3
M3 7052
C16 68p
C146 220p
R35 1K
R36
R37
R38 1K
R43 1K
R49 1K
R19 1K

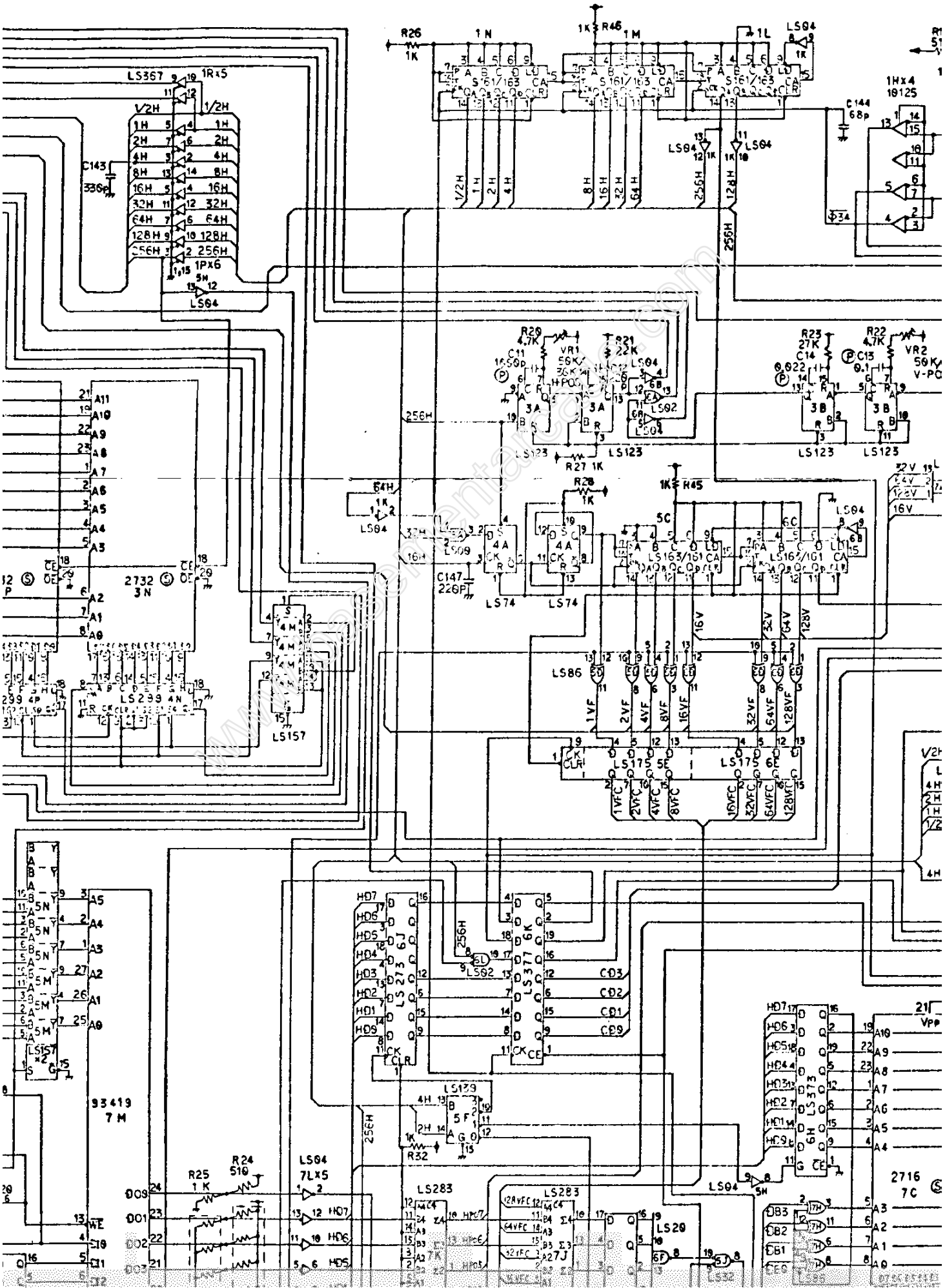
6
7
8
9
10
11
LS367
1Rx5
1/2H
1H
2H
4H
8H
16H
32H
64H
128H
256H
1Px6
LS04
C143
330p
R26
1K
1N
R46
1M
1L
LS161/163
C144
68p
1Hx4
19125
R20
4.7K
VR1
56K
R21
22K
C11
1650p
R23
27K
C14
0.022
C13
0.1
R22
4.7K
VR2
50K
V-PO
LS123
LS02
R27 1K
R28
1K
R45
LS74
C147
220P
LS163/161
LS86
LS175
LS157
2732
3N
LS299
93419
7M
R25
1K
R24
510
LS04
7Lx5
LS283
LS20
LS373
LS273
LS377
LS139
R32
2716
7C
16V
32V
64V
128V
Vpp

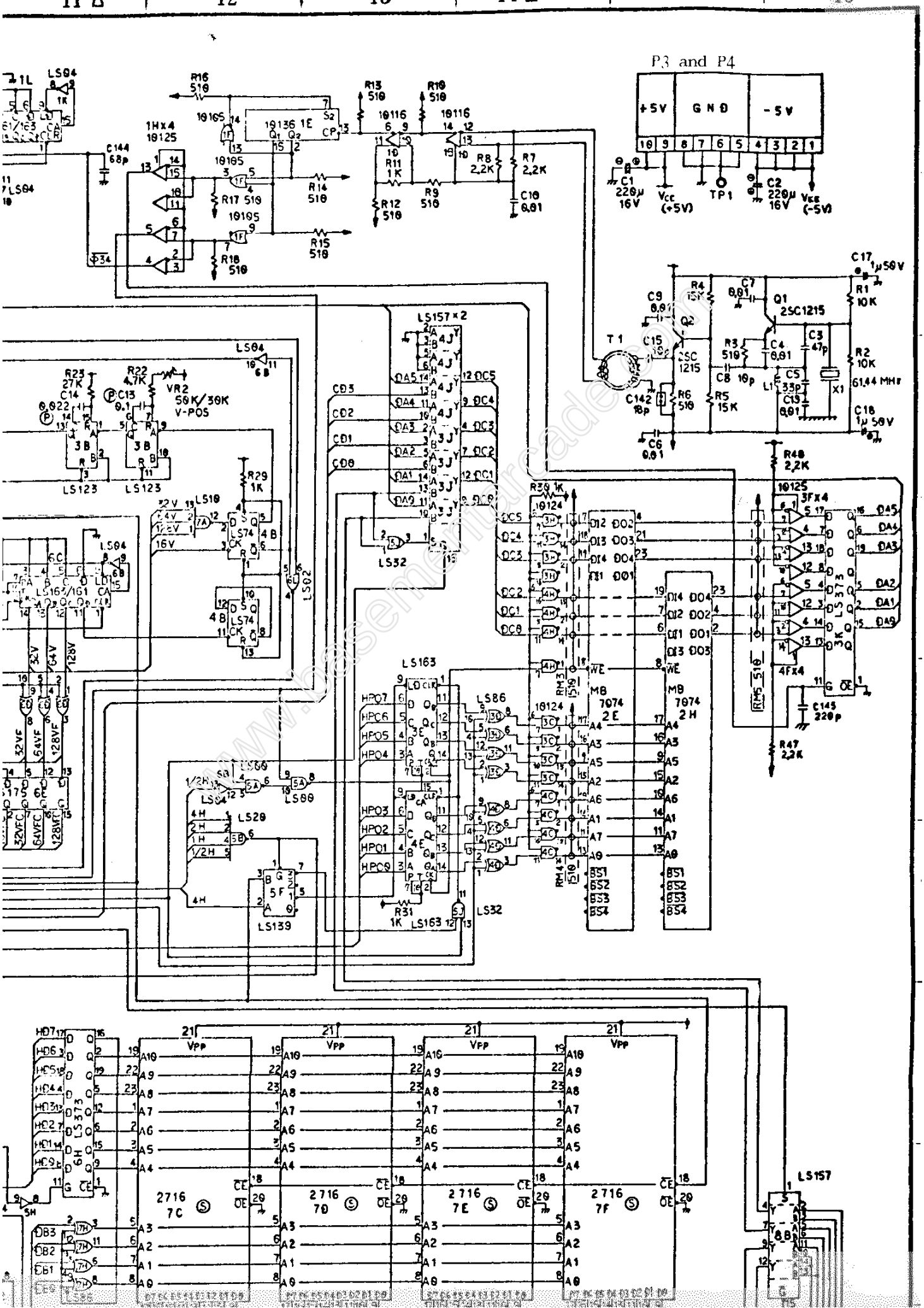
11 Δ
12
13
14 Δ
15
16
P3 and P4
+5V
GND
-5V
C1 220µ 16V
Vcc (+5V)
TP1
C2 220µ 16V
VEE (-5V)
LS157 × 2
LS163
LS86
LS139
LS157
2716 7C
2716 7D
2716 7E
2716 7F
LS373
MB 7074 2E
MB 7074 2H
T1
Q1 2SC1215
Q2 2SC1215
61.44 MHz
VR2 50K/30K V-POS

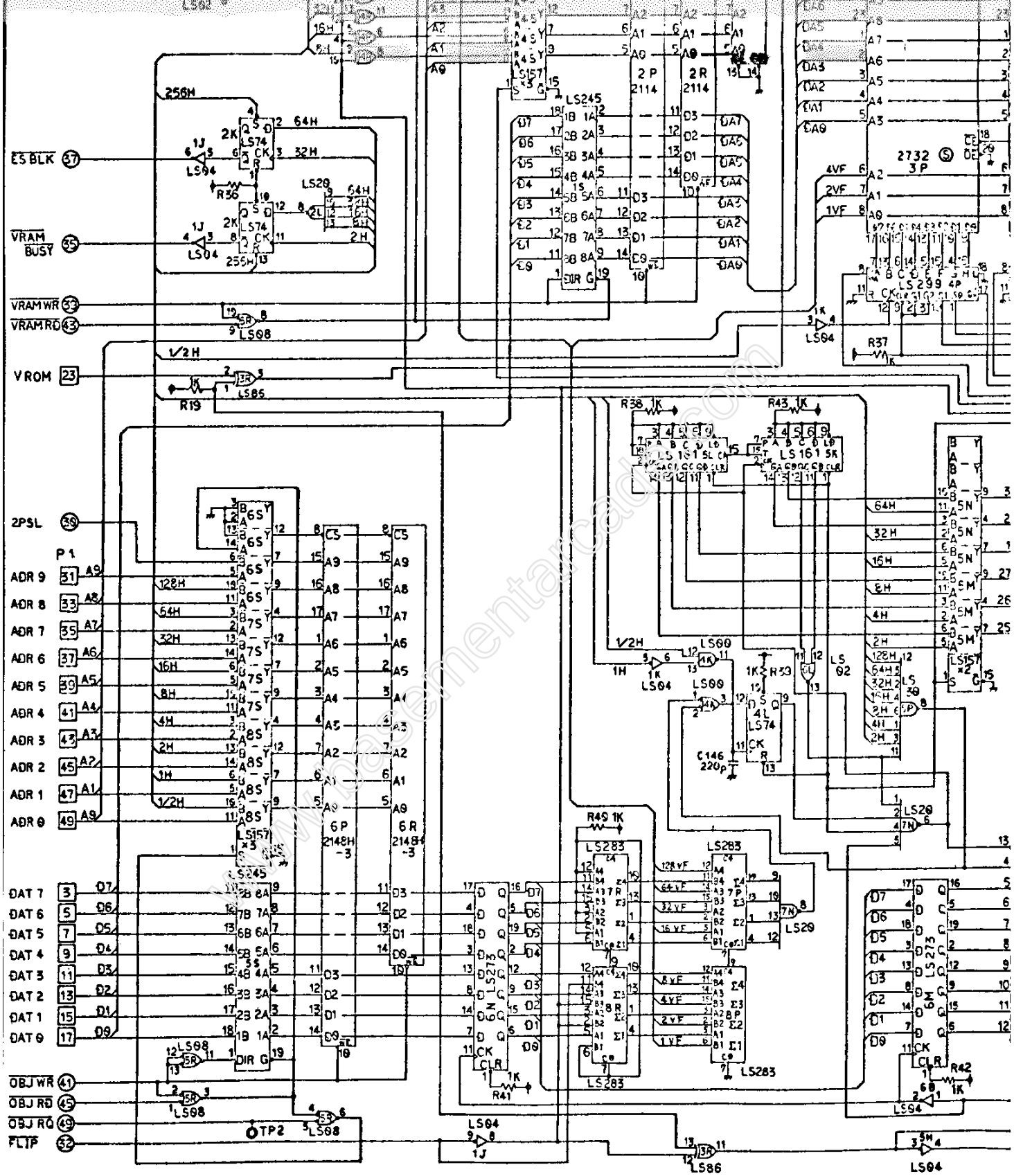

REVISIONS

1 2 3 4 5 6

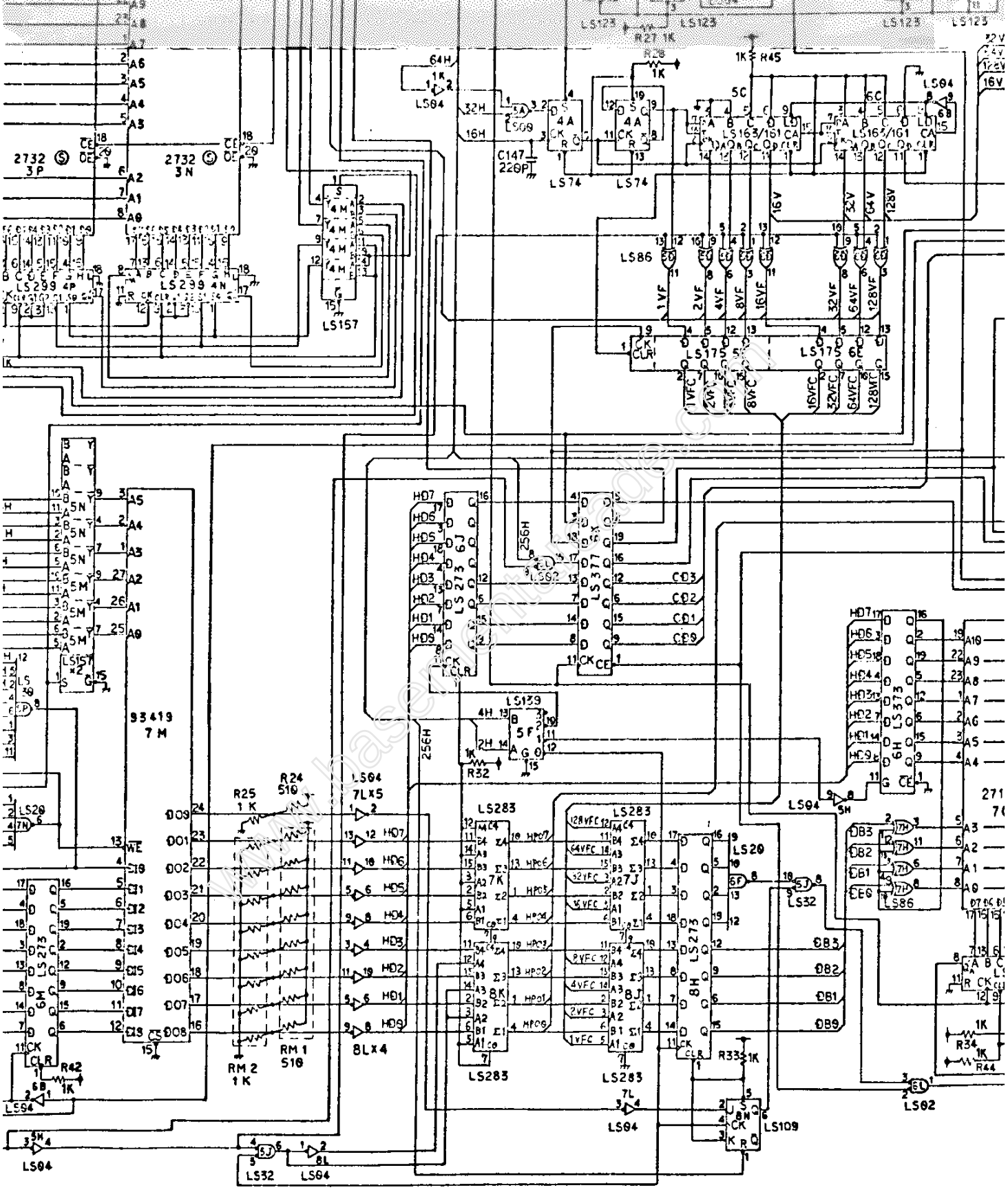
2732 3P
2732 3N
LS299 4P
LS299 4N
LS157
LS74
LS163/161
LS86
LS175
LS273
LS377
LS373
LS139
LS283
LS20
LS32
LS109
LS04
LS02
93419 7M
R24 510
R25 1K
RM 1 510
RM 2 1K
R42 1K
R32 1K
R33 1K
R34 1K
R44 1K
C147 220P
R27 1K
R28 1K
R45 1K
7LX5
8LX4

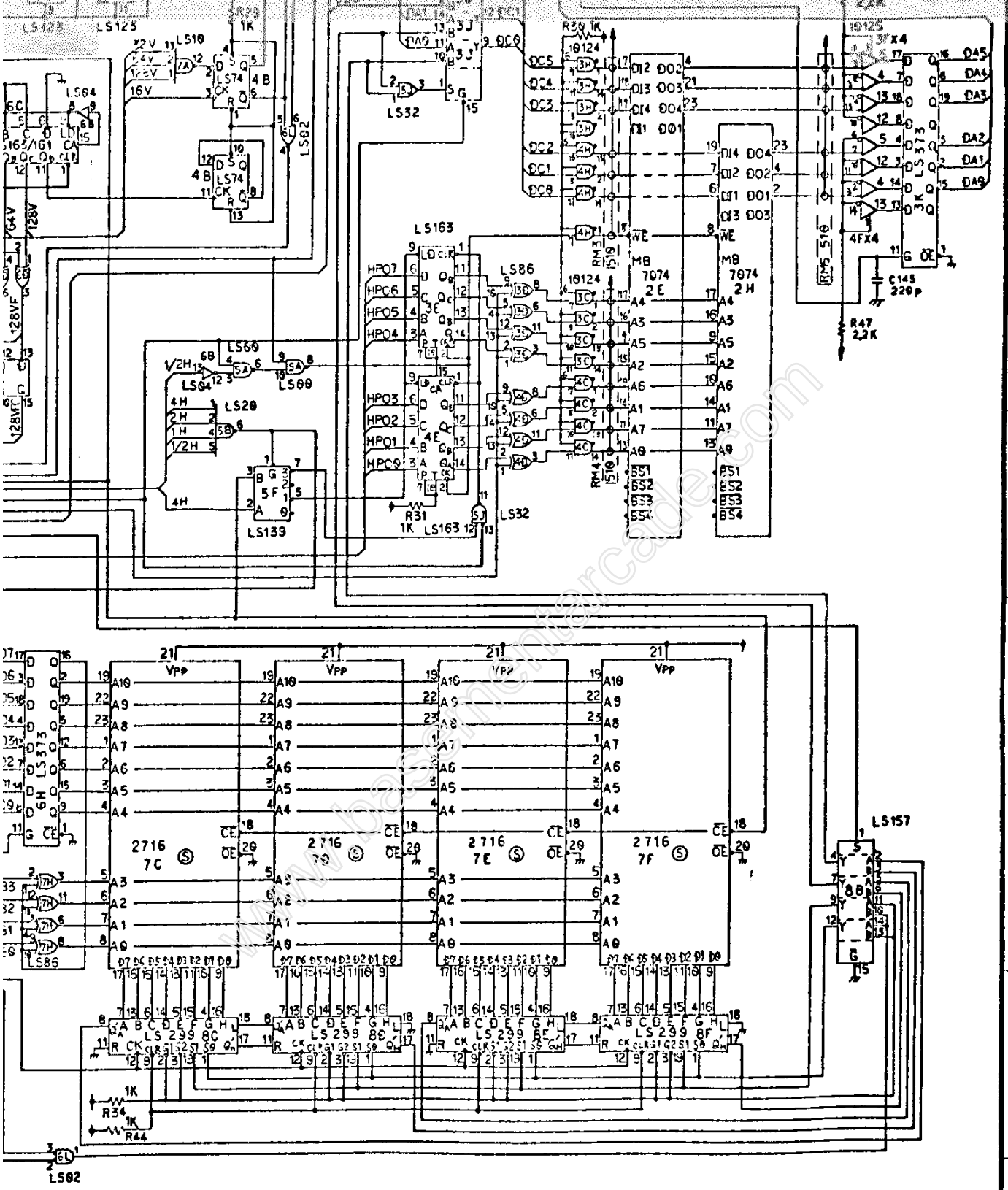

MATERIAL	FINISH	
DWG TITLE Donkey Kong Junior Video P.C. Board		DATE 5-19-82
DRAWN O. Komori	DWG NO. 4	
CHECKED		
Nintendo	SCALE	SIZE

www.basementarcade.com

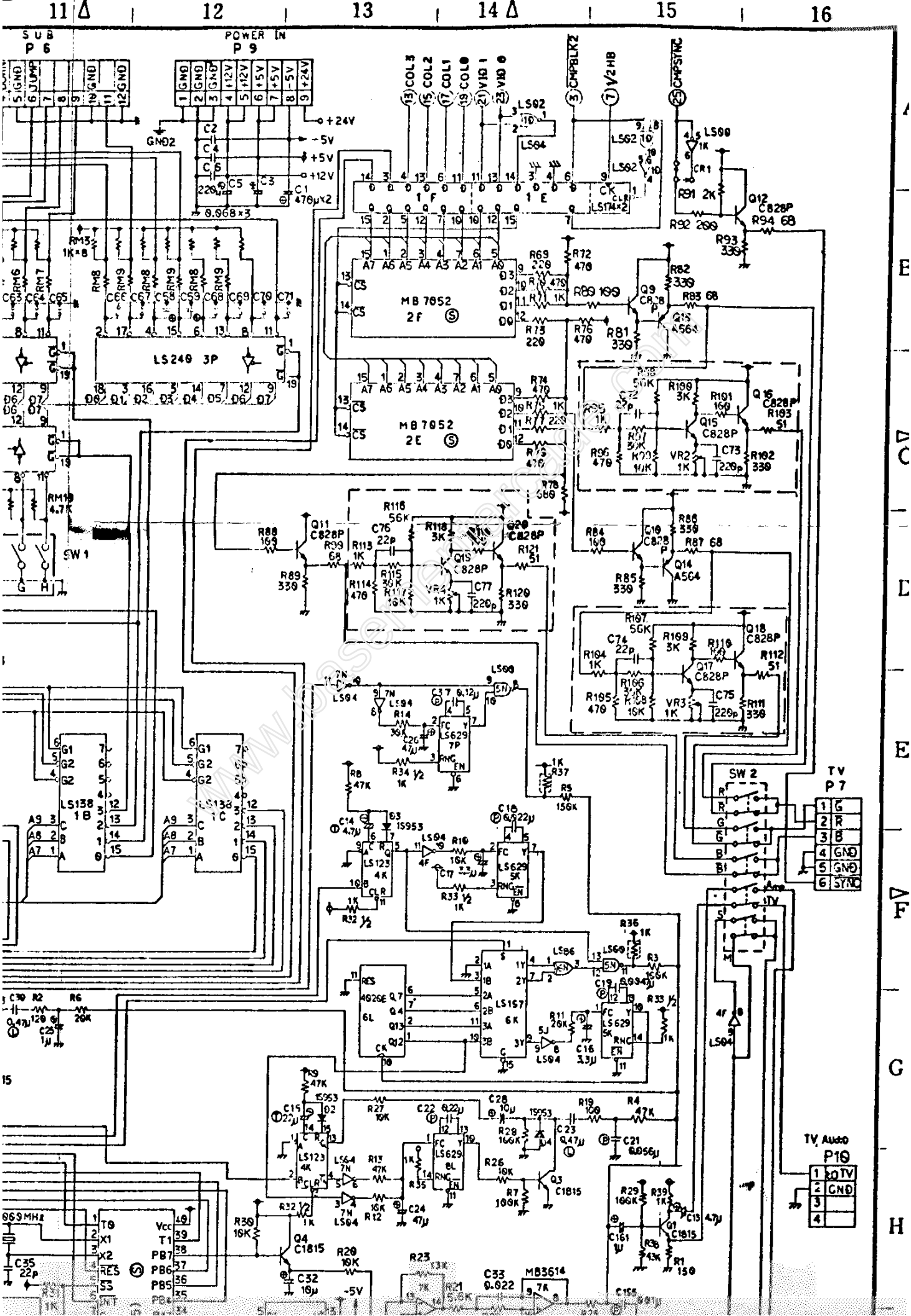
SUB
P 6
POWER IN
P 9
+24V
-5V
+5V
+12V
GND2
LS240 3P
MB 7052
2F
MB 7052
2E
LS174×2
LS138
1B
LS138
1C
LS157
6K
4026E
6L
LS123
4K
LS629
5K
LS629
7P
LS629
8L
TV
P 7
TV Audio
P10
SW 1
SW 2
MB3614
-5V

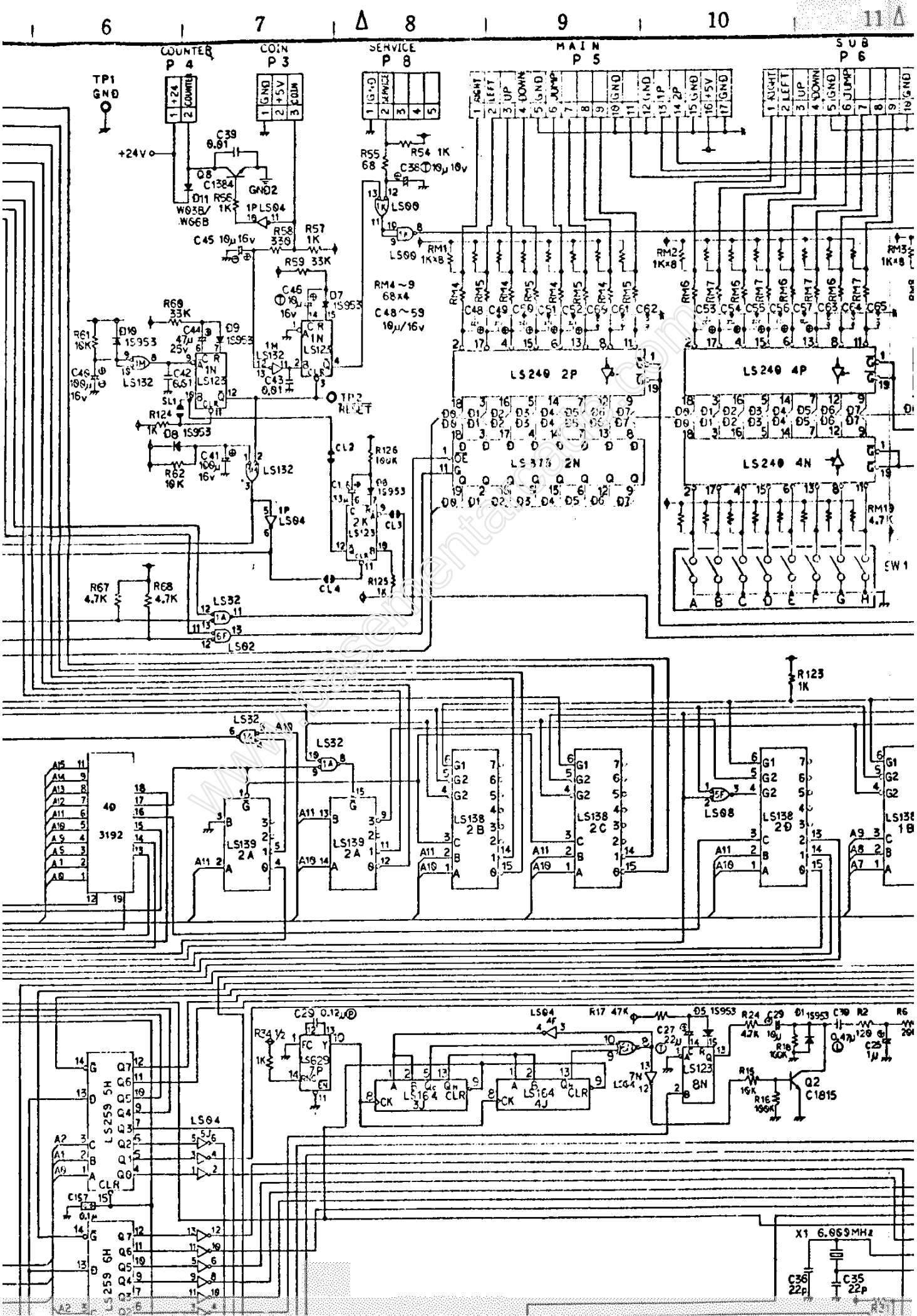
6
7
8
9
10
11
COUNTER P 4
COIN P 3
SERVICE P 8
MAIN P 5
SUB P 6
TP1 GND
+24V
C39 0.01
Q8 C1384
GND2
D11 W03B/W06B
R56 1K
1P LS04
C45 10μ 16v
R58 330
R57 1K
R59 33K
C46 10μ 16v
D7 1S953
R60 33K
D9 1S953
D10 1S953
R61 18K
C44 47μ 25v
C42 6.8
C48 100μ 16v
LS132
SL1
R124 1K
D8 1S953
C41 100μ 16v
R62 10K
C43 0.01
TP2 RESET
R55 68
R54 1K
C38 10μ 10v
LS00
RM1 1K×8
RM4~9 68×4
C48~59 10μ/16v
RM2 1K×8
RM3 1K×8
LS240 2P
LS240 4P
LS373 2N
LS240 4N
RM10 4.7K
SW1
A B C D E F G H
CL2
R126 100K
D6 1S953
CL3
CL4
R125 1K
R67 4.7K
R68 4.7K
LS32
LS02
R123 1K
3192
LS139 2A
LS138 2B
LS138 2C
LS08
LS138 2D
LS138 1B
LS259 5H
LS259 6H
LS629 7P
LS164 4J
LS123 8N
R17 47K
D5 1S953
C27 22μ
R24 4.7K
C29 10μ
D1 1S953
C30 0.47μ
R2 120
C25 1μ
R18 100K
R15 10K
R16 100K
Q2 C1815
X1 6.0699MHz
C36 22p
C35 22p

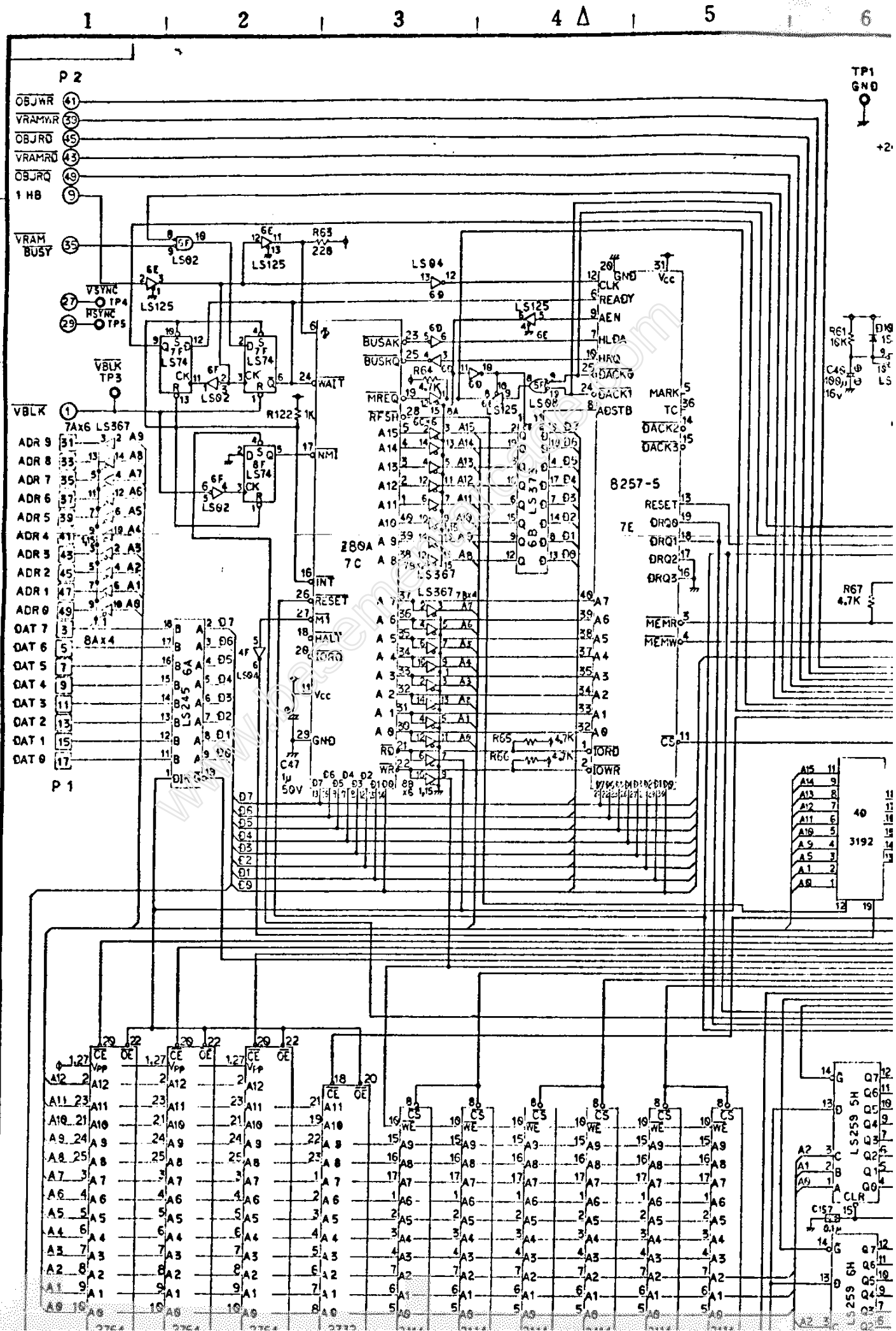
P 2
OBJWR
VRAMWR
OBJRD
VRAMRD
OBJRQ
1 HB
VRAM BUSY
VSYNC
HSYNC
TP4
TP5
VBLK
TP3
VBLK
7Ax6 LS367
ADR 9
ADR 8
ADR 7
ADR 6
ADR 5
ADR 4
ADR 3
ADR 2
ADR 1
ADR 0
DAT 7
DAT 6
DAT 5
DAT 4
DAT 3
DAT 2
DAT 1
DAT 0
8Ax4
LS245
P 1
LS02
LS125
LS74
R63
220
R122
1K
WAIT
NMI
INT
RESET
M1
HALT
IORQ
Vcc
GND
C47
1μ
50V
LS04
BUSAK
BUSRQ
MREQ
RFSH
R64
4.7K
Z80A
7C
LS367
RD
WR
R65
4.7K
R66
4.7K
LS373
8257-5
7E
CLK
READY
AEN
HLDA
HRQ
DACK0
DACK1
ADSTB
MARK
TC
DACK2
DACK3
RESET
DRQ0
DRQ1
DRQ2
DRQ3
MEMRD
MEMWR
IORD
IOWR
CS
TP1
GND
R61
16K
C48
100μ
16v
R67
4.7K
3192
LS259 5H
LS259 6H
CLR
C157
0.1μ

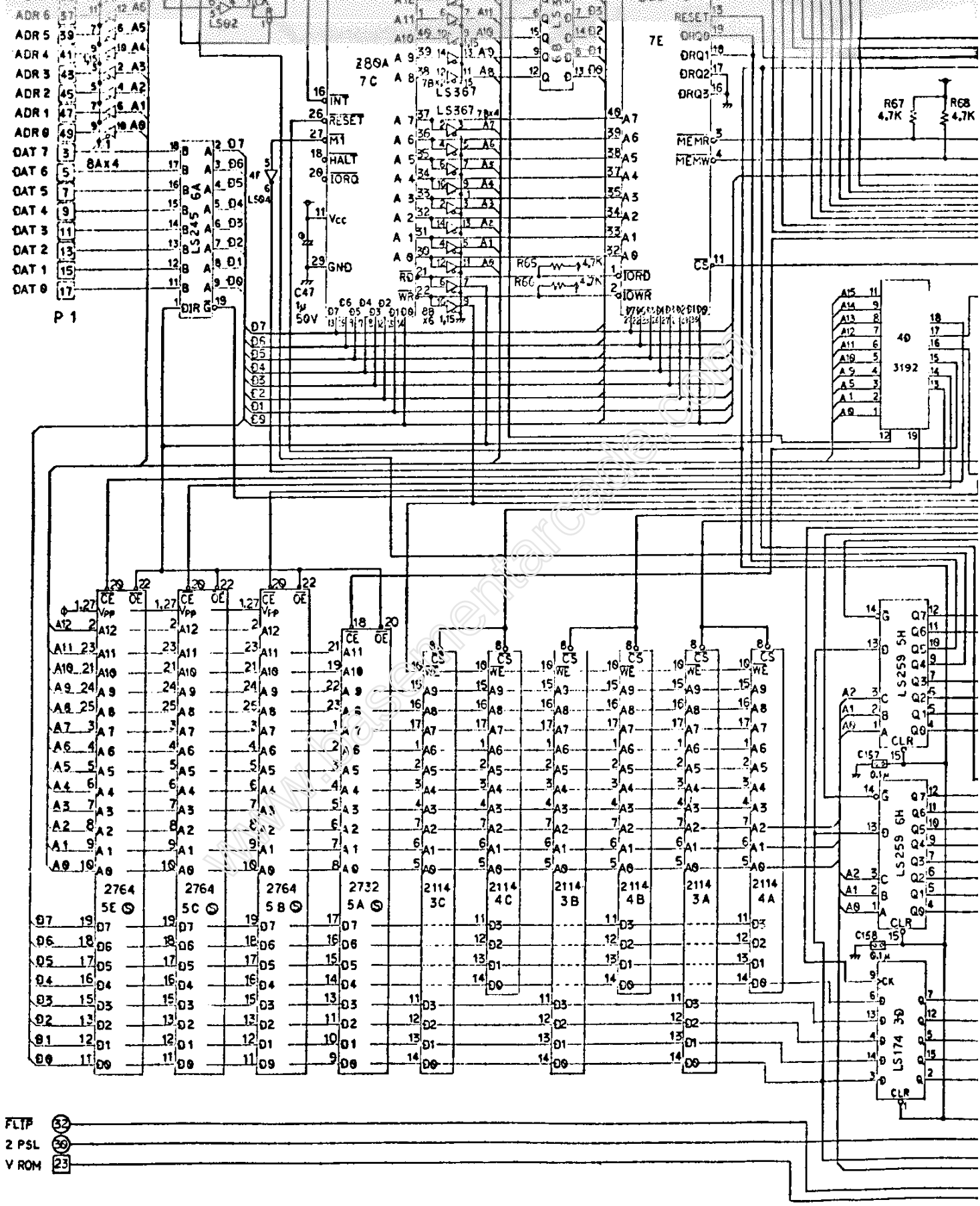

NOTE 1: EDGE CONNECTOR PIN ARRANGEMENT

PARTS-SIDE		SOLDERED-SIDE	
1	GND	A	GND
2	GND	B	GND
3	+5V	C	+5V
4	+5V	D	+5V
5	+12V	E	+12V
6	-5V	F	-5V
7		H	COIN
8	2 PLAY	J	1 PLAY
9	2P RIGHT	K	1P RIGHT
10	2P LEFT	L	1P LEFT
11	2P UP	M	1P UP
12	2P DOWN	N	1P DOWN
13	2P JUMP	P	1P JUMP
14		R	
15		S	SERVICE
16	VIDEO GND	T	GND
17	GREEN	U	RED
18	SYNC	V	BLUE
19	SPEAKER	W	TV Audio
20	+24V	X	COUNTER
21	GND	Y	GND
22	GND	Z	GND

1P:Main S:
2P:Sub S:
1 PLAY:1
2 PLAY:2

REVISIONS

1 2 3 4 5 6

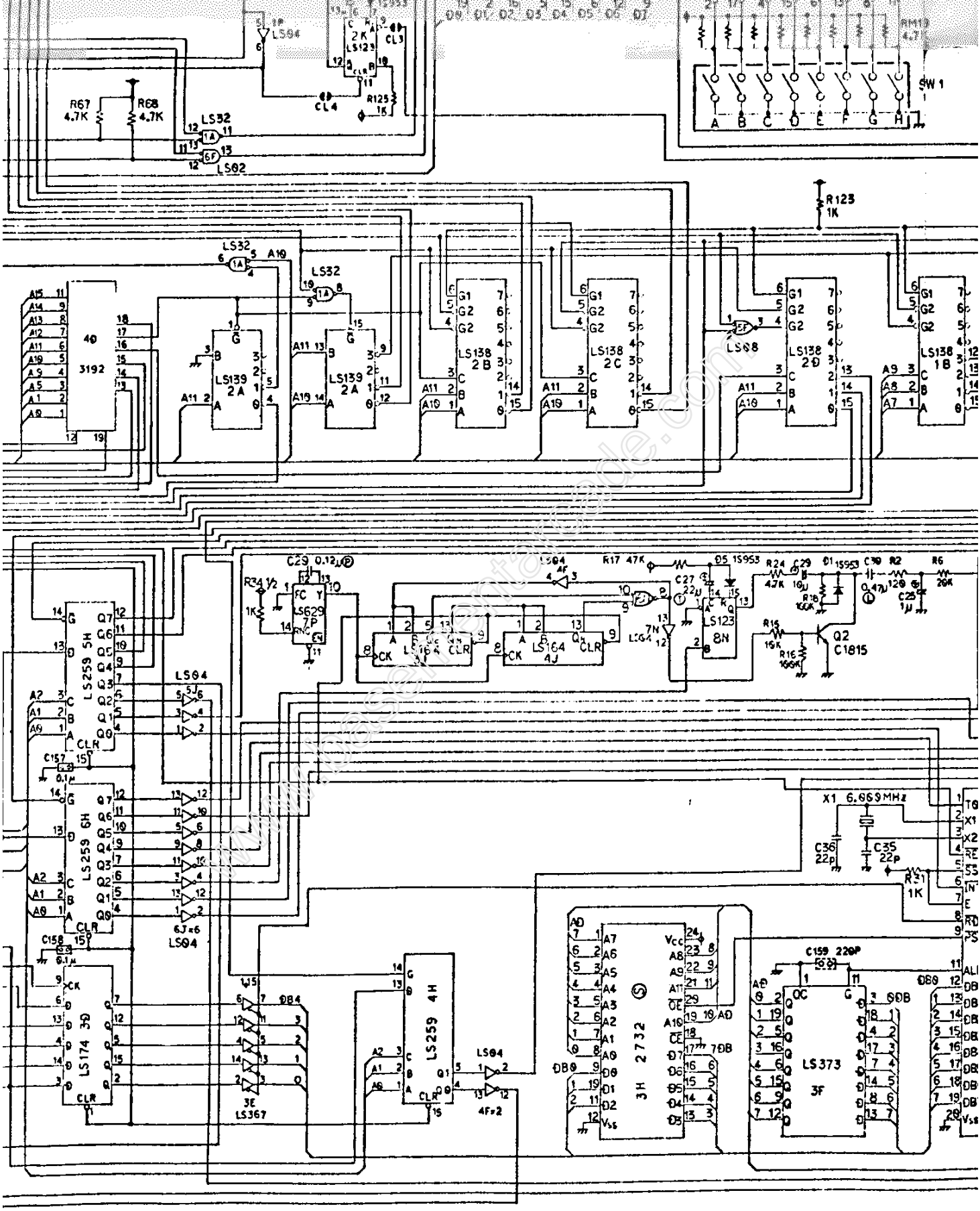

1P:Main Side
2P:Sub Side
1 PLAY:1 PLAYER SW.
2 PLAY:2 PLAYER SW.

P12 PIN ARRANGEMENT

-5V				GND				+5V	
1	2	3	4	5	6	7	8	9	10

NOTE:2
Parts surrounded with dotted line are optional.

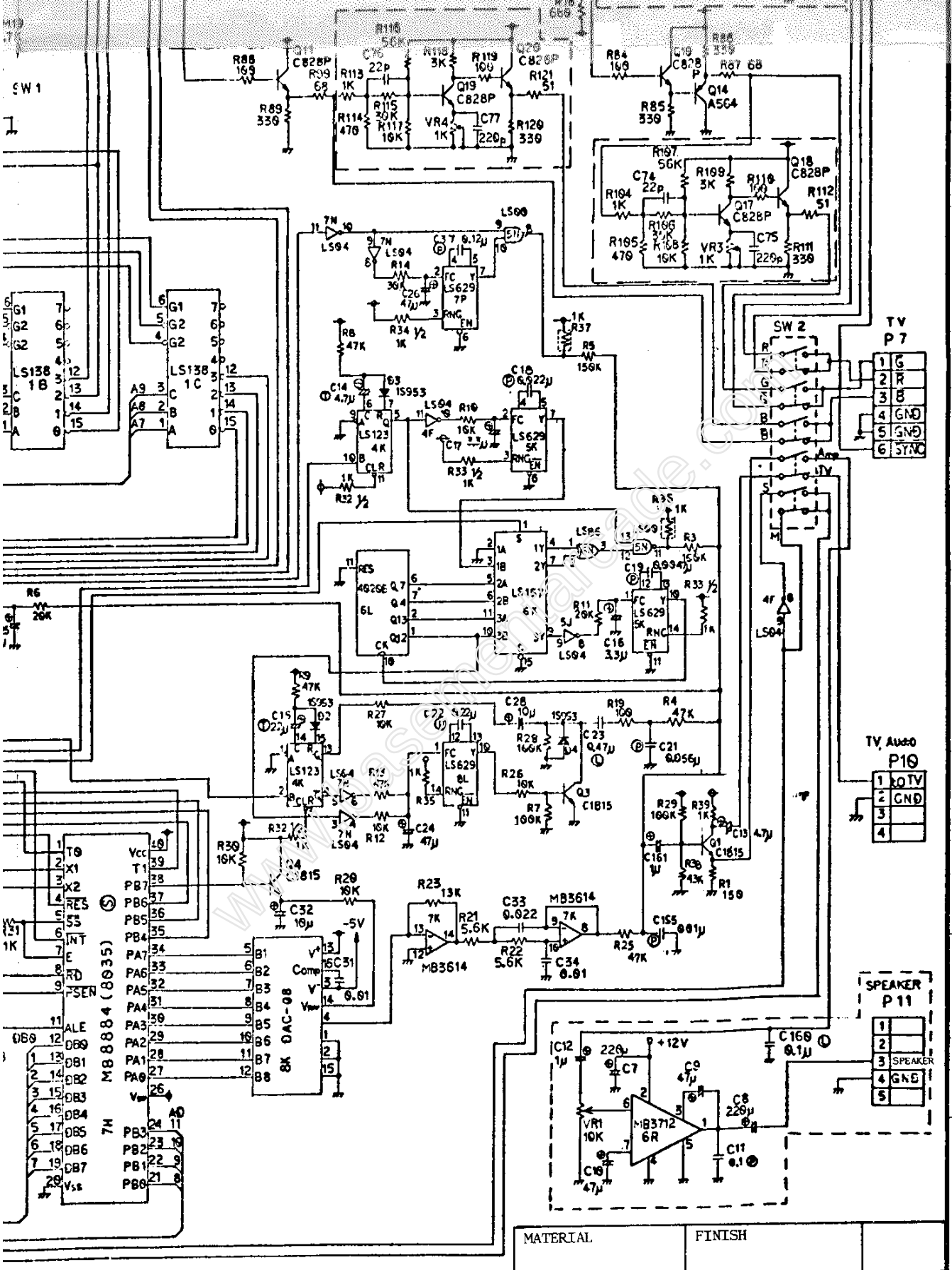

MATERIAL	FINISH	
DWG TITLE	Donkey Kong Junior CPU P.C. Board	DATE 5-31-82
DRAWN	O. Komori	DWG NO. 5
CHECKED		
Nintendo	SCALE	SIZE

NOTE: 3
SWITCH 2: Each Switch has Cut-land and Short-land set with parallel.

www.classicgamearcade.com