November 1983
Game No. 0A30

"ASTRON BELT" IS ENGINEERED AND DESIGNED BY SEGA; MANUFACTURED UNDER LICENSE BY BALLY MIDWAY MFG. CO.; TM & © 1983 SEGA

Parts and Operating Manual

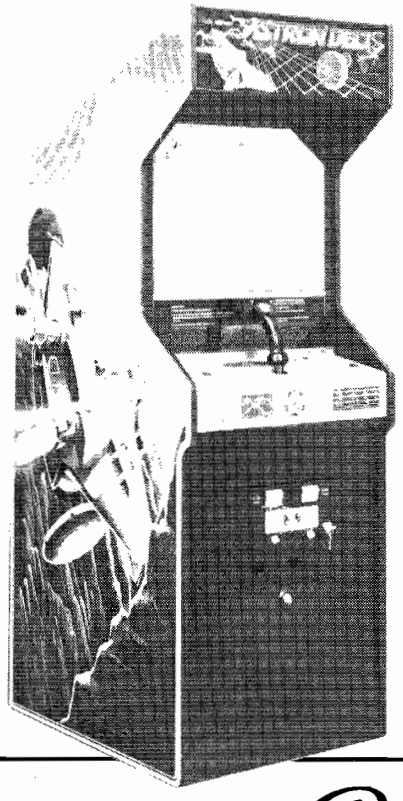

Bally

MIDWAY MFG. CO.

10601 W. Belmont Avenue
Franklin Park, Illinois 60131
U.S.A.

Phone: (312) 451-9200 Cable Address: MIDCO Telex No.: 72-1596

Form No. 0A30-00300-0000

WARNING

THIS GAME MUST BE GROUNDED. FAILURE TO DO SO MAY RESULT IN DESTRUCTION TO ELECTRONIC COMPONENTS.

WARNING: This equipment generates. uses. and can radiate radio frequency energy and if not and used in accordance with the instructions manual. may cause interference to radio communications. It has been tested and found to comply with the limits for a CLASS A computing device pursuant to SUBPART J of PART 15 of FCC RULES. which are designed to provide reasonable protection against such interference when operated in a commerical environment. Operation of this equipment in a residential area is likely to cause interference in which case the user at his own expense will be required to take whatever measures may be required to correct the interference.

ELECTRICAL BULLETIN: FOR ALL APPARATUS COVERED BY THE CANADIAN STANDARDS ASSOCIATION (CSA) STANDARD C22.2 NO. 1, WHICH EMPLOYS A SUPPLY CORD TERMINATED WITH A POLARIZED 2-PRONG ATTACHMENT PLUG.

CAUTION: TO PREVENT ELECTRIC SHOCK DO NOT USE THIS (POLARIZED) PLUG WITH AN EXTENSION CORD, RECEPTACLE OR OTHER OUTLET UNLESS THE BLADES CAN BE FULLY INSERTED TO PREVENT BLADE EXPOSURE.

ATTENTION: POUR PREVENIR CHOCS ELECTRIQUES NE PAS UTILISER CETTE FICHE POLARISEE AVEC UN PROLONGATEUR. UNE PRISE DE COURANT OU UNE AUTRE SORTIE DE COURANT, SAUF SI LES LAMES PEUVENT ETRE INSEREES A FOND SANS EN LAISSER AUCUNE PARTIE A DECOUVERT.

Bally MIDWAY T.M.

Invites You To Use

OUR TOLL FREE NUMBERS FOR SERVICE INFORMATION CONCERNING THIS GAME, OR ANY OTHER BALLY MIDWAY GAME YOU NOW HAVE ON LOCATION.

CALL US FOR PROMPT, COURTEOUS ANSWERS TO YOUR PROBLEMS.

VIDEO → Continental U.S. 1-800-323-7182

PINBALL → Continental U.S. 1-800-323-3555

Bally MIDWAY T.M — 10601 West Belmont Avenue. Franklin Park. Illinois, 60131 phone (312) 451-9200

© COPYRIGHT MCMLXXXIII BY BALLY/MIDWAY CO. ALL RIGHTS RESERVED.

NO PART OF THIS PUBLICATION MAY BE REPRODUCED BY ANY MECHANICAL, PHOTOGRAPHIC, OR ELECTRONIC PROCESS, OR IN THE FORM OF A PHONOGRAPHIC RECORDING, NOR MAY IT BE TRANSMITTED, OR OTHERWISE COPIED FOR PUBLIC OR PRIVATE USE, WITHOUT PERMISSION FROM THE PUBLISHER. THIS MANUAL IS FOR SERVICE USE ONLY, AND NOT FOR GENERAL DISTRIBUTION. FOR PERMISSION REQUESTS, WRITE: MIDWAY MFG. CO., 10750 W. GRAND AVE., FRANKLIN PARK, IL 60131

Printed in U.S.A.

ASTRON BELT
TABLE OF CONTENTS

DESCRIPTION . . . . . **Page**

Location And Setup

Inspection 1-1
Installation 1-3
Self Test 1-4
Game Volume Adjustment Control 1-4
Option Switch Settings 1-4

Game Operation

Self Test Mode 2-1
Attract Mode 2-6
Ready To Play Mode 2-7
Play Mode 2-7

Maintenance And Repair

Cleaning 3-1
Fuse Replacement 3-1
Opening The Control Panel 3-2
Removal Of The Main Display Glass & T.V. Bezel 3-2
T.V. Monitor Replacement 3-3
Printed Circuit Board Replacement 3-3
Opening The Attraction Panel 3-4

Illustrated Parts Breakdown

No.0A30-Astron Belt-Front 4-2
Astron Belt-Front-Parts List 4-3
Astron Belt-Rear Access 4-4
Astron Belt-Rear Access-Parts List 4-5
Astron Belt-Control Grip Assy 4-6
Astron Belt-Control Grip Assy-Parts List 4-7
Astron Belt-Final Ground Plane Assy 4-8
Astron Belt-Final Ground Plane Assy-Parts List 4-9
Front Door Assembly-U.S.A. 50 4-10
Front Door Assembly-Parts List-U.S.A. 50 -Parts List 4-11
Header Fluorescent Fixture Assy & Parts List 4-12

VIDEO DISC PLAYER SET-UP INSTRUCTIONS

SET-UP INSTRUCTIONS

REMOVE HEX HEAD HOLD-DOWN SCREW AT BASE OF PLAYER.
SLIDE OUT SHELF BY FINGER SLOTS.
REMOVE VIDEO DISC TAPED TO TOP OF PLAYER.
REMOVE THIS BRACKET BY REMOVING 2 END SCREWS.
INSTRUCTIONS CONTINUED ON LOWER LABEL.

M051-00A30-A013

CONTINUED FROM TOP LABEL

TO OPEN PLAYER, CONNECT POWER CORD OF GAME TO OUTLET. PULL OUT SAFETY INTERLOCK SPRING/BUTTON NEAR GAME POWER CORD.
(**CAUTION:** GAME IS NOW ENERGIZED.)

ACTUATE POWER SWITCH, THEN PRESS EJECT BUTTON. LID WILL OPEN SLIGHTLY. (IF LID DOES NOT OPEN, SEE OWNER'S MANUAL.) OPEN LID. LOOSEN SHIPPING SCREW NEAR CENTER OF TABLE, AND REMOVE LENS CAP. STORE LENS CAP ONTO BOSS ON UNDERSIDE OF PLAYER COVER.

PLACE DISC ON TURNTABLE. (REFER TO LABEL FOR PROPER SIDE DOWN.) CLOSE LID.

REATTACH BRACKET.
SLIDE SHELF FORWARD.
REINSTALL SCREW INTO SHELF.
PRESS PLAY BUTTON.

IMPORTANT: CLEAN DISC ONCE EVERY OTHER WEEK EITHER WITH WARM SOAPY WATER OR WINDEX. RINSE THOROUGHLY TO REMOVE ALL CLEANSER RESIDUE. AIR DRY COMPLETELY BEFORE REINSTALLING.

(**CAUTION:** WHEN TRANSPORTING GAME AND DURING LONG IDLE PERIODS REMOVE DISC, REINSTALL LENS CAP AND TIGHTEN SHIPPING SCREW.)

ALIGN ARROWS BEFORE TIGHTENING SHIPPING SCREW

M051-00A30-A014

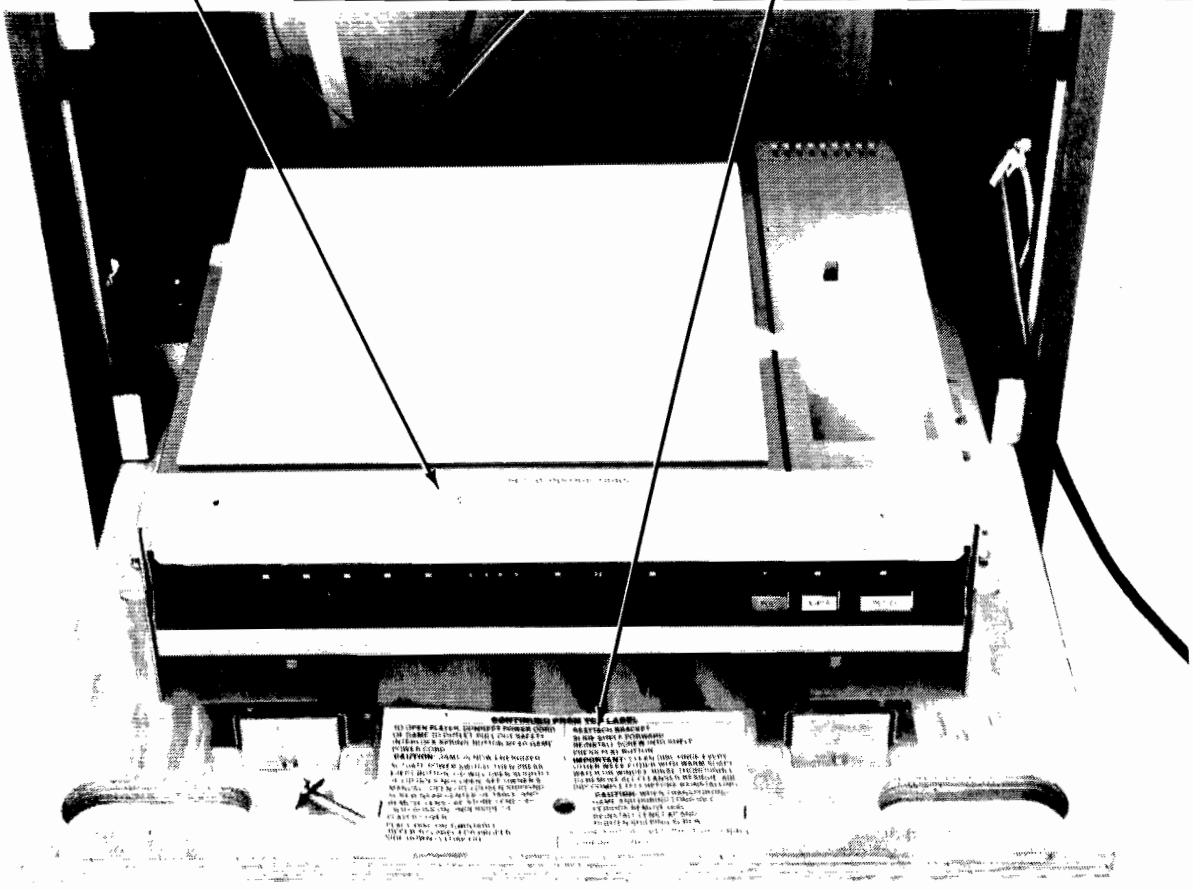

LOCATION AND SETUP

INSPECTION:

1. Remove the game from its shipping crate.

2. Inspect the entire outside of it for any signs of damage.

   ☐ Any scratches?, dents?, cracks?
   ☐ Any broken controls?
   ☐ Any broken glass or plastic?
   ☐ Just look it over closely and make a note of any signs of damage.

3. Remove the shipping cleats from the bottom of the cabinet.

   ☐ **UPRIGHT MODELS ONLY:** In order to help prevent easy theft of your game, you may wish to remove the Caster Wheel Assemblies from the bottom of your cabinet at this time.

4. Install the four levelers, one at each corner of the cabinet. See Figure 1-1.

   ☐ Level the cabinet.

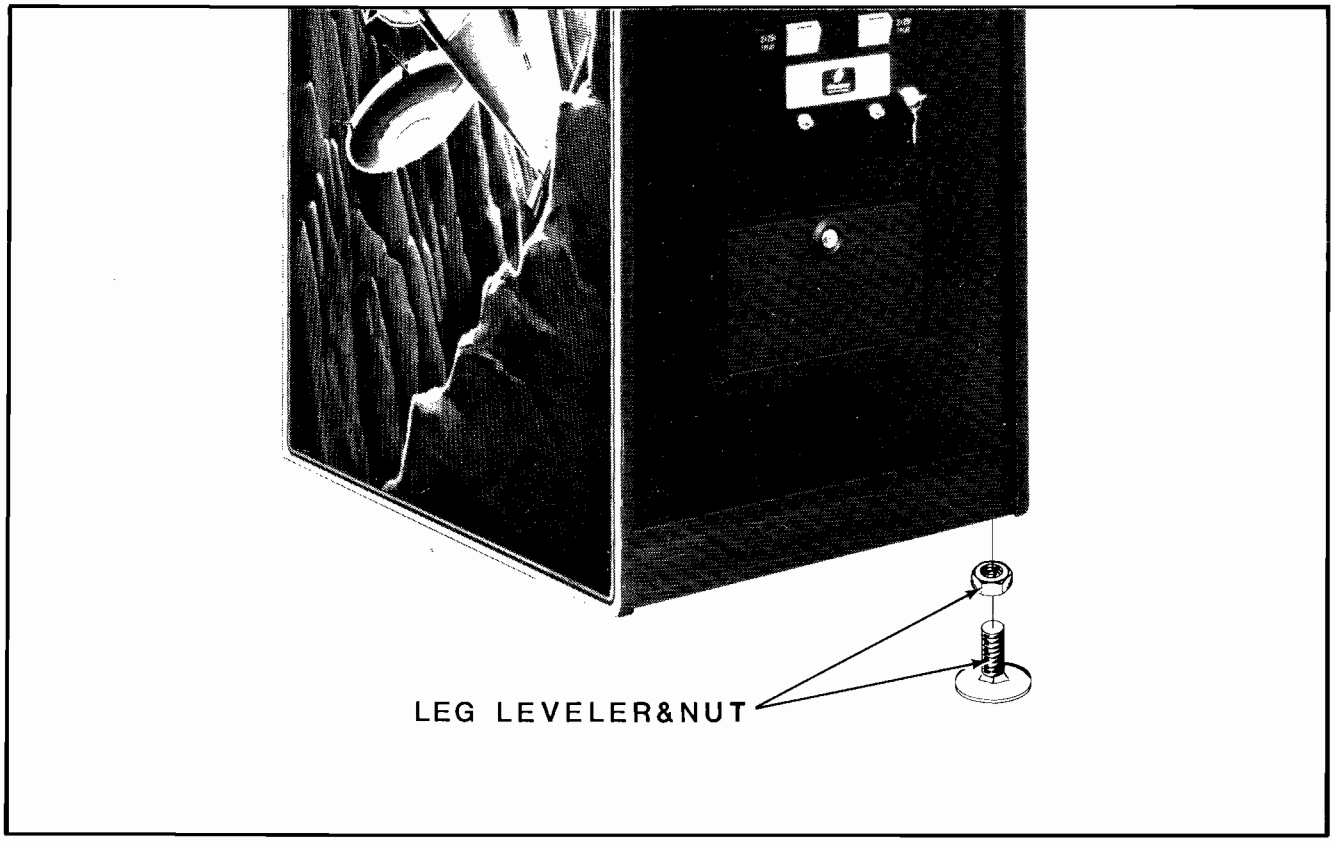

Figure 1-1 Leg Leveler Installation

5. Open the cabinet and inspect the inside of the game for any signs of damage. See Figure 1-2.

   ☐ Also check to make sure all plug-in connectors on the wire harness are firmly seated.

   NOTE: ALL connectors or plugs are keyed so they will only go together when all pins are properly lined up.

   ☐ Re-plug any connectors found unplugged. DO NOT FORCE PLUGS ONTO CONNECTORS. DO NOT FORCE PLUGS TOGETHER. If it won't go on easily, assuming the keys are lined up, it either does not belong there or is damaged.

   ☐ Make sure all printed circuit boards (P.C.B.'s) are firmly seated in their connectors. See Figure 1-2. These connectors are also keyed. The P.C.B.'s will only go in to them one way without being damaged.

   ☐ Note the location of the games serial number. See Figure 1-2.

   ☐ Check all major subassemblies to be sure they are mounted securely. These are called out in Figure 1-2.

   Power supply.
   Control panel(s).
   T.V. monitor.
   Other P.C.B.'s and/or P.C.B. rack, etc.
   Power Chassis Assembly.
   Video Disc Player.

6. Make a note of any problems that can't be easily corrected.

7. Call your distributor and/or service man about your problem list.

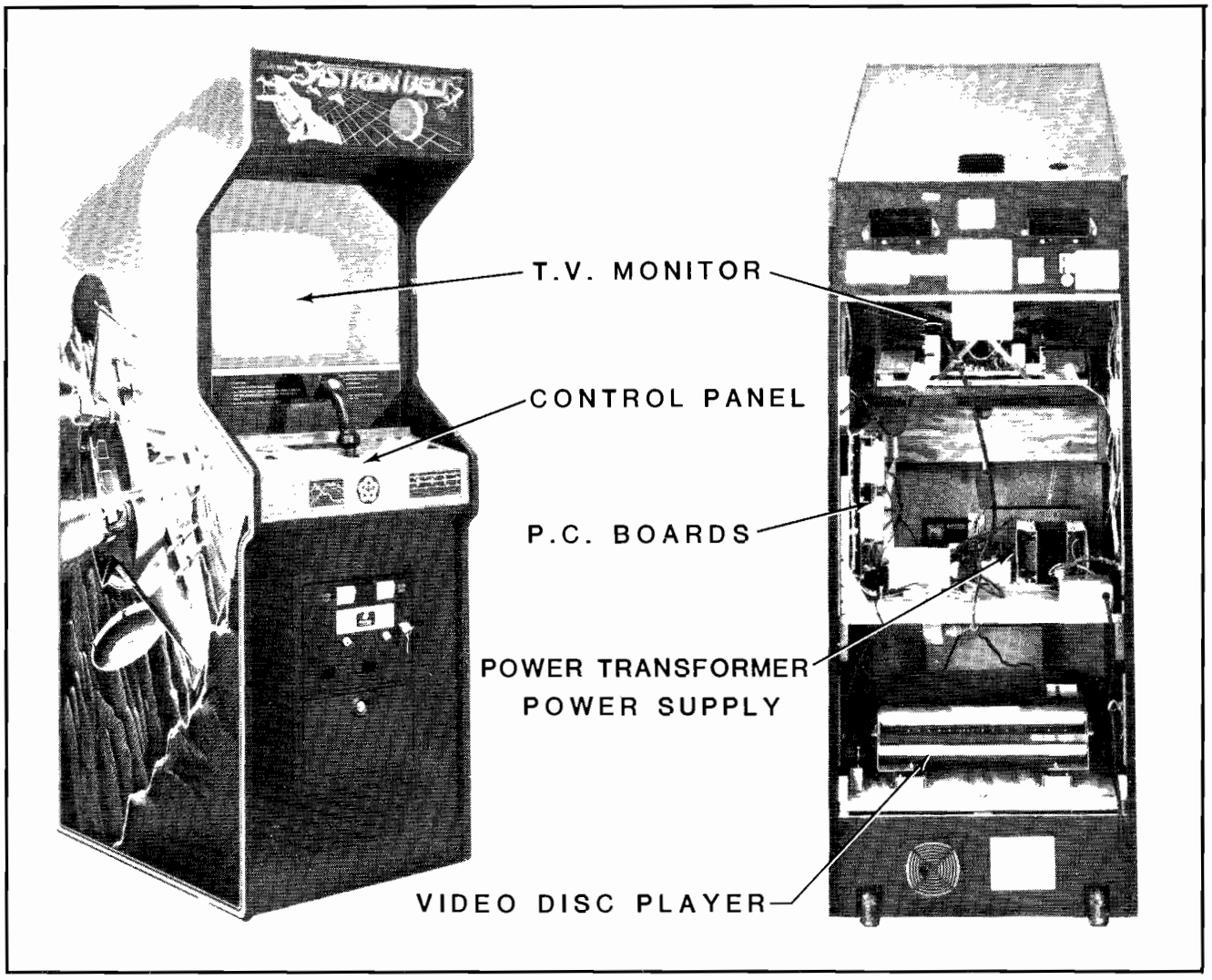

Figure 1-2 Location of Serial No., Interlock Switch, & Major Sub-Assemblies

INSTALLATION:

1. **Location requirements:**

   ☐ Power:
   Domestic 110 V at 60 Hz

   ☐ Temperature: 32° to 100°F (0° to 38°C)

   ☐ Humidity: Not over 95% relative

   ☐ Space required:
   Upright 25″ x 34″ (63 x 86cm)

   ☐ Game height:
   Upright 74″ (188cm) APPROX.

2. **Voltage Selection:**

   Your game is designed to work properly on the line voltage where you are located. Check your line voltage with a meter to determine what its value is. Then check the power input wires to the main power supply transformer on your game to be sure they are connected to taps which correspond to your line voltage value.

   If the power input wires to the main power supply transformer are not connected to tapswhich correspond to your local line voltage, move them to the proper taps.

   If the line voltage in your area falls outside the upper or lower limits of the range of inputs covered by the main power supply transformer, **DO NOT PLUG YOUR GAME IN** until you have talked with your distributor and/or service man and obtained a solution to this problem. Otherwise you could damage your game.

3. **Interlock and power ON/OFF switches.** See Figure 1-2.

   ☐ To help prevent the possibility of getting an electric shock while working inside the game cabinet, interlock switches have been installed at each cabinet access door (this DOES NOT include the coin door in the Upright models).

   ☐ When any access door is opened, the interlock switch installed there turns off all power to the game.

   ☐ Check each interlock switch for proper operation.

   After checking the line voltage in your area and determining that the input wires to the main power supply transformer of your game are connected properly - or - after obtaining a solution to your over or under voltage problem from your distributor and/or your service man, plug the game into your A.C. wall outlet.

The game ON/OFF switch is located as shown in Figure 1-2. Turn the game on and allow it to warm up a few minutes.

Slowly open each access door to the game (this does not include the coin door on the Upright models).

As the door is opened approximately 1″ (2.54cm) the power to the game should go off (the T.V. monitor, all the lights, and all sounds will stop).

If this does not happen, check the interlock switch by this door to see if it has broken loose from its mounting or if it is stuck in the "ON" position.

If the switch is found to be bad, turn the game off, unplug it, and replace the interlock switch.

When done, plug the game back into the wall outlet, close the access door, and turn the game back on.

After the game has warmed up, repeat the above interlock switch test.

When the interlock switch is working properly and turns the power to the game off, power may be restored to the game with the access door(s) open. Take hold of the interlock switch plunger and **gently** pull it out to its fully extended position. THIS IS TO BE USED **ONLY** FOR SERVICING THE GAME. See Figure 1-3.

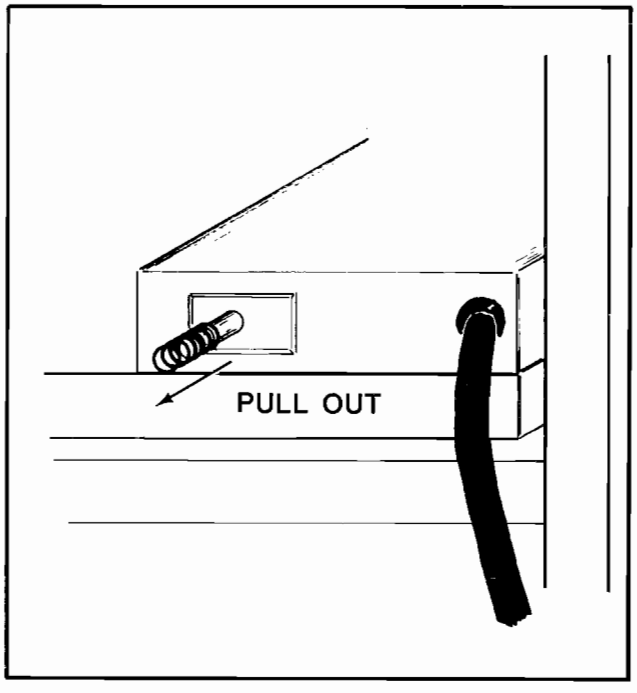

Figure 1-3 Interlock Switch Operation

4. **Video Disc.**
   The video disc provided with your game is recorded on BOTH sides. In the event one side should become damaged, it may be flipped over to play the other undamaged side.

   Should it be determined at any time that your game will be out of service for an extended period, we **STRONGLY RECOMMEND** that the laser disc be removed from the player, inserted in its jacket, and stored in a vertical position to help prevent warping.

SELF-TEST:

Your new game will Self-Test itself to see if it has any bad parts. The information it receives while testing itself will be shown on the T.V. monitor. Some information can also be heard through the games speaker system. See the **SELF-TEST MODE OPERATION** section for a more detailed description of this function.

When there is a bad result according to the Self-Test, call your distributor and/or service man to have the trouble fixed unless it is something you can do yourself (such as replace a bad RAM or ROM chip).

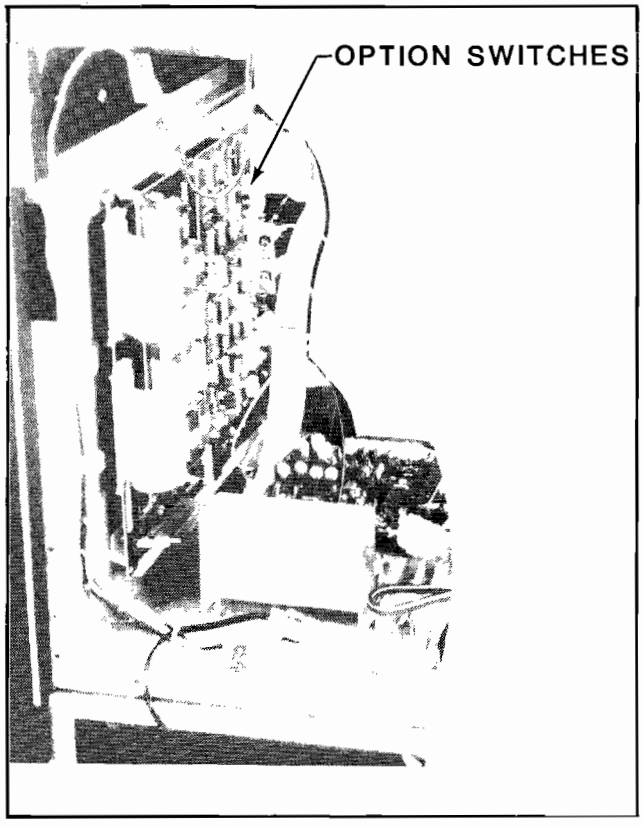

Figure 1-5 Option Switch Locations

GAME VOLUME ADJUSTMENT CONTROL. See Figure 1-4.

The game volume control pots are located on a bracket just inside the door. There are 2 pots, one for left channel volume and one for right channel volume. For adjustment, they may be reached through the coin door.

To make the sounds louder, turn the pots clockwise as you face them (↷).

To make the sounds **less** loud, turn the pots counterclockwise as you face them (↶).

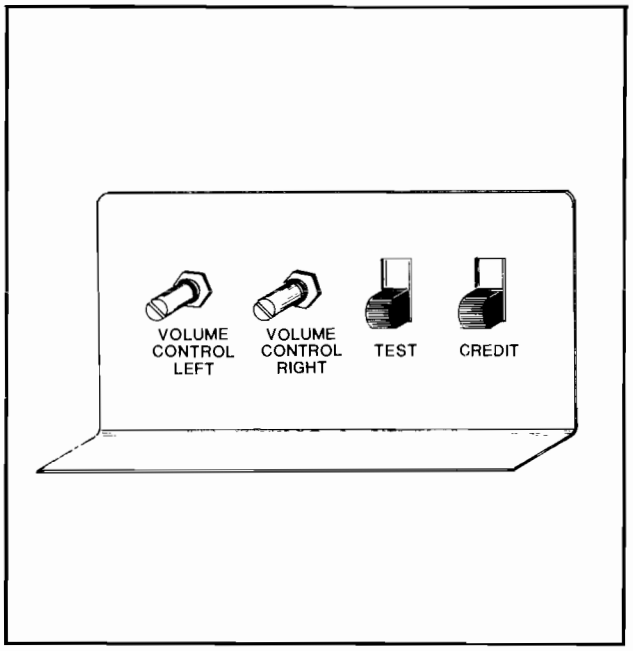

Figure 1-4 Game Volume Adjustment Contols

OPTION SETTINGS:

All options are adjusted via the two banks of option switches located on the games CPU Board. These are located as shown in Figure 1-5. When changing any options, ALWAYS perform the Self-Test and play the game to be sure the ones selected are working properly and to be sure the that no switches were accidentally moved that were not meant to be. (These switches are small and this can happen.)

The P.C. Board option switch settings, and what they will make the game do are shown in Figure 1-6.

NOTE: In order to set the option switches located on the games P.C. Boards, these Boards need not be removed from their card rack.

ADJUSTMENTS FOR IC BOARD
(ASTRON BELT)

COIN/CREDIT OPTIONS SWITCH — **DIP SW #A**

OPTION		1	2	3	4	5	6	7	8
1 COIN	1 CREDIT	OFF	OFF	OFF	OFF	OFF	OFF	OFF	OFF
1 COIN	2 CREDITS	ON	OFF	OFF	OFF	ON	OFF	OFF	OFF
1 COIN	3 CREDITS	OFF	ON	OFF	OFF	OFF	ON	OFF	OFF
1 COIN	4 CREDITS	ON	ON	OFF	OFF	ON	ON	OFF	OFF
1 COIN	5 CREDITS	OFF	OFF	ON	OFF	OFF	OFF	ON	OFF
1 COIN	6 CREDITS	ON	OFF	ON	OFF	ON	OFF	ON	OFF
2 COINS	1 CREDIT	OFF	ON	ON	OFF	OFF	ON	ON	OFF
3 COINS	1 CREDIT	ON	ON	ON	OFF	ON	ON	ON	OFF
4 COINS	1 CREDIT	OFF	OFF	OFF	ON	OFF	OFF	OFF	ON
2 COINS	3 CREDITS	ON	OFF	OFF	ON	ON	OFF	OFF	ON
2 COINS 4 COINS 5 COINS 6 COINS	1 CREDIT 2 CREDITS 3 CREDITS 4 CREDITS	OFF	ON	OFF	ON	OFF	ON	OFF	ON
2 COINS 4 COINS	1 CREDIT 3 CREDITS	ON	ON	OFF	ON	ON	ON	OFF	ON
1 COIN 2 COINS 3 COINS 4 COINS 5 COINS	1 CREDIT 2 CREDITS 3 CREDITS 4 CREDITS 6 CREDITS	OFF	OFF	ON	ON	OFF	OFF	ON	ON
1 COIN 2 COINS 3 COINS 4 COINS	1 CREDITS 2 CREDITS 3 CREDITS 5 CREDITS	ON	OFF	ON	ON	ON	OFF	ON	ON
1 COIN 2 COINS	1 CREDITS 3 CREDITS	OFF	ON	ON	ON	OFF	ON	ON	ON
1 COIN 2 COINS 3 COINS 4 COINS 5 COINS	2 CREDITS 4 CREDITS 6 CREDITS 8 CREDITS 11 CREDITS	ON	ON	ON	ON	ON	ON	ON	ON
		COIN SW #1				COIN SW #2			

OPTION SWITCH SETTING — **DIP SW#B**

OPTION		1	2	3	4	5	6	7	8
ADVERTISE SOUND	ON OFF	OFF ON							NOT USED
PLAY TIMER	60 SEC. 50 SEC. 40 SEC. ∞ SEC.		OFF ON OFF ON	OFF OFF ON ON					
NORMAL GAME HARD GAME					OFF ON				
RESERVE SHIPS SCORE	5000, 10000, 20000 5000, 20000, 40000 10000, 20000, 30000 10000, 20000, 40000					OFF ON OFF ON	OFF OFF ON ON		
CONTINUE GAME SELECT GAME								OFF ON	

Figure 1-6 Option Switch Settings

GAME OPERATION

Your NEW game is a one player game **ONLY** with a color T.V. monitor. The game gives a display which is composed of parts of space and planet scenes taken from a movie. You are always piloting a SHIP that is supposed to destroy all the enemy alien space craft and planet bound installations it can.

The game has five possible modes of operation: ATTRACT, READY-TO-PLAY, PLAY, HIGH SCORE INI TIAL, and SELF-TEST.

SELF-TEST MODE

The Self-Test mode is a special mode for checking game play statistics as well as game switches and computer functions. It is the easiest and best way to check for proper operation of the entire game.

NOTE: Putting the game into Self-Test **WILL NOT** cause the game to erase any CREDITS it has in its memory when the Self-Test mode is entered.

You may begin a Self-Test at any time by holding the spring loaded Self-Test switch to the "TEST" position for a few seconds after the power to the game is on (the Self-Test switch is located just in side the cabinet on a bracket not far from the coin door frame as you face it). When this is done, the game will react as follows:

1. If the game is in the Attract mode when the Self-Test switch engaged, it will immediately go into the Self-Test mode. This is illustrated by the display of the Self-Test Mode Menu on the monitor screen.

2. If the game is in the Ready-To-Play mode or the Play mode when the Self-Test switch is engaged, it will also immediately go into the Self-Test mode. Again, this is illustrated by the display of the Self-Test Mode Menu on the monitor screen.

The Self-Test mode has eight (8) major categories as illustrated.

1. Self-Tests are performed on either a CONTINUOUS basis or on an INDIVIDUAL basis.

2. It is easy to select what category you want to enter. By using the control device, the Cursor at the left of the screen can be moved UP and DOWN until it is in front of the category you want to test. Release the control device at this time.

3. First, bring the Cursor opposite the word "CONTINUE" in the Self-Test mode menu. By pressing the "START GAME" button the word "CONTINUE" can be changed to "INDIVIDUAL". Pressing the "START GAME" button one more time would bring back the word "CONTINUE" again. This initial setting sets the ground work for the way the game will conduct all the rest of the Self-Tests you instruct it to perform on itself.

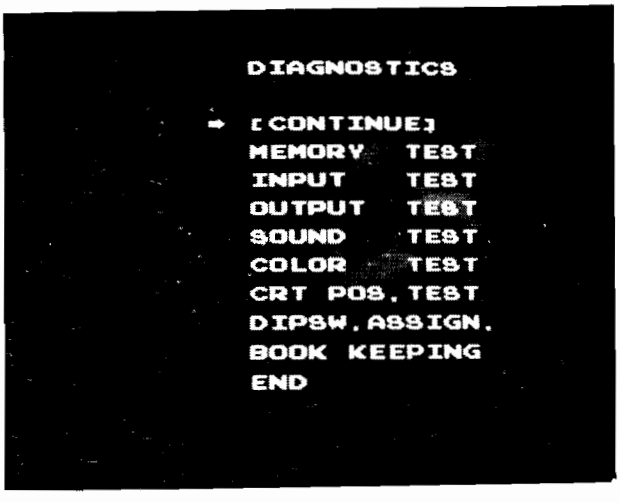

Self-Test - Menue

CONTINUOUS TESTING:

1. After the Cursor has been positioned, depressing the "START GAME" Button on the console will cause the monitor screen to display the test category you have selected.

2. When this test is complete, pressing the "START GAME" button again will the next test in line to be performed.

3. Following this sequence will cause every test under the one you first selected to be performed (in a CONTINUOUS manner) until the end of the sequence is reached. At that point, one more press of the "START GAME" button will cause the game to display the Self-Test mode Menu again.

4. The game will now wait for you to either select another series of tests to perform on itself or to exit the Self-Test mode.

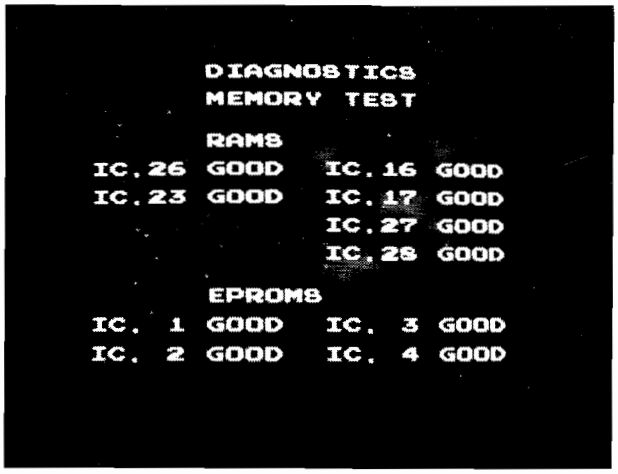

Self-Test - Memory

INDIVIDUAL TESTING:

1. After the Cursor has been positioned, depressing the "START GAME" Button on the console will cause the monitor screen to display the test category you have selected.

2. When this test is complete, pressing the "START GAME" button again will the Self-Test mode Menu to be displayed on the monitor screen again.

3. The game will now wait for you to either select another individual test to perform on itself or to exit the Self-Test mode.

☐ In this category, each of the games RAM and EPROM IC's are checked individually and the results displayed on the monitor screen.

During the INPUT TEST section of the Self-Test mode, the game will give a display which looks like the following:

TO END THE SELF-TEST MODE:

1. This can be done **ONLY** when the Self-Test Mode Menu is on the screen.

2. Now move the Cursor to the word "END" and depress the "START GAME" button. Normal game functions will return in a few seconds.

SELF-TEST MODE SCREEN PRESENTATIONS:

The next group of Displays show the **CORRECT** screen presentation for **EACH** category of the Self-Test mode.

During the MEMORY TEST section of the Self-Test mode, the game will give a display which looks like that shown below.

☐ In this category, each of the games player operated controls - including the coin switches on the back side of the coin door - may be checked individually. A monitor screen indication is given as each switch/control is actuated. If no indication is given, that switch/control is either not working, miswired, or disconnected. Check it out thoroughly.

NOTE: When pressing the "START GAME" button to exit this test, it MUST be held down for MORE than one second.

During the OUTPUT TEST section of the Self-Test mode, the game will give a display which looks like that shown below.

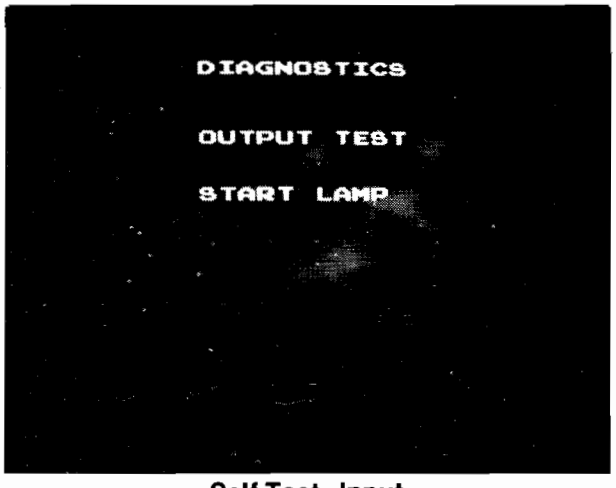

Self-Test - Input

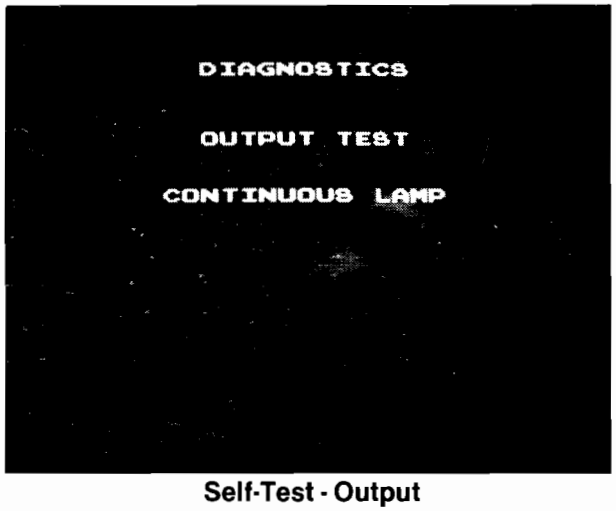

Self-Test - Output

☐ In this category, each of the games output lamps are checked individually. They should light as they are indicated on the monitor screen. This test automatically alternates back and forth between the outputs.

During the SOUND TEST section of the Self-Test mode, the game will give a display which looks like that shown here.

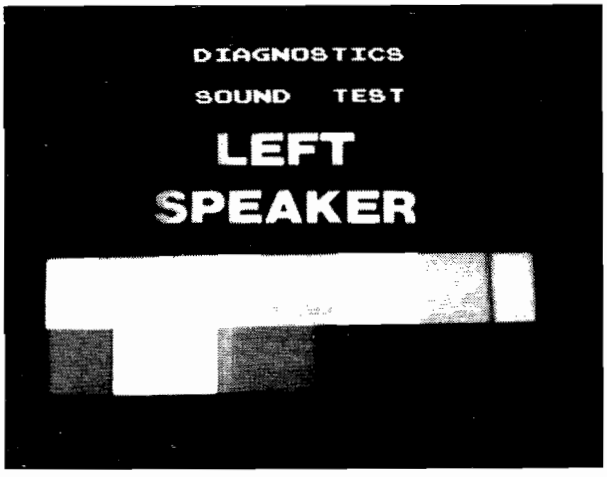

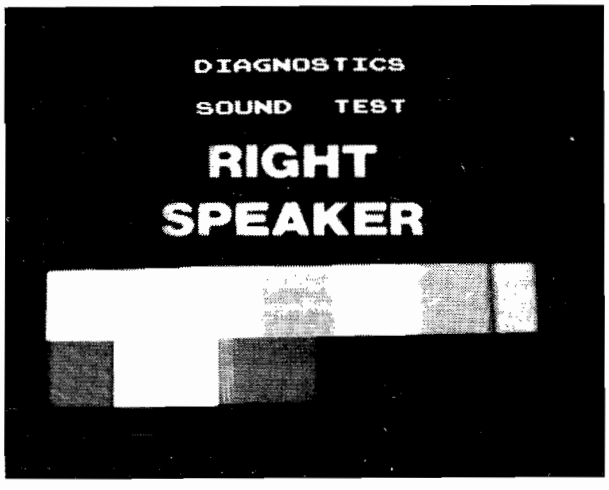

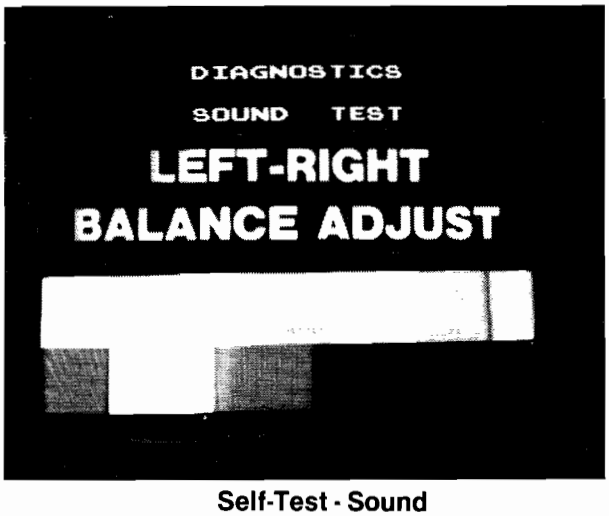

Self-Test - Sound

☐ In this category, each of the games speakers are checked individually. Sounds are produced by the speaker indicated on the monitor screen. When that speaker is no longer indicated on the screen the sound should stop. This test automatically switches between the various speaker combinations.

☐ A color bar is also present on the screen during this test.

☐ Pushing the "START GAME" button **AFTER** the VIBRASEAT CHECK will cause the monitor display to change to the following:

☐ In this category, each of the games sound effects are checked individually as the games FIRE control is activated repeatedly. The sounds are produced by the games speakers and indicated on the monitor screen at the same time.

☐ Pressing the "START GAME" button one more time will cause the game to exit this test and proceed to the next function.

During the COLOR TEST section of the Self-Test mode, the game will give a display which looks like that shown below.

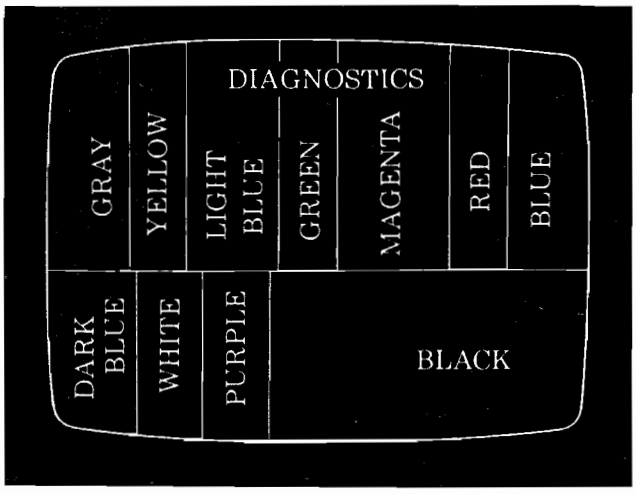

☐ In this category, the "COLOR ADJUSTMENT" indicator appears on the screen temporarily and then disappears to be replaced by a color bar pattern which is transmitted from the laser disc.

☐ When the adjustments are complete, Press the "START GAME" button one more time and the monitor display will change as follows.

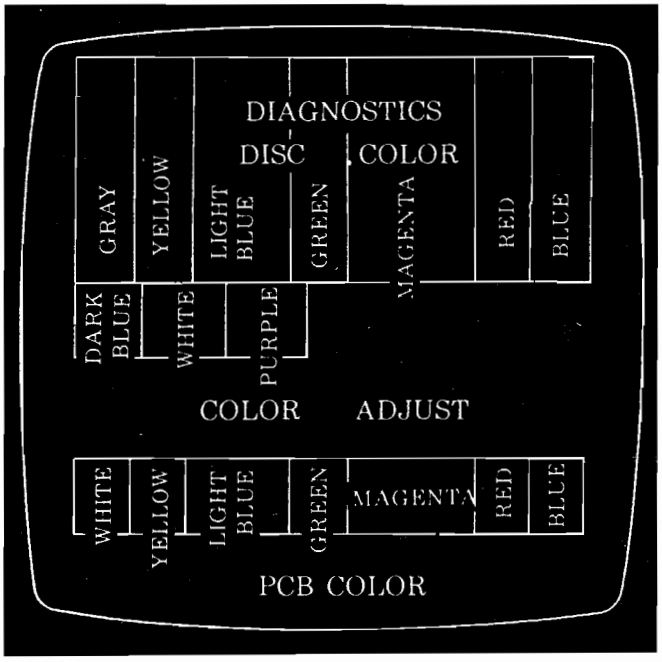

☐ The TOP ROW of color bars are those sent from the laser disc player while the BOTTOM ROW of color bars are generated and sent from one of the games PC Boards. The purpose of this display is to allow comparison of the two sources.

☐ To balance the two displays, adjust VR6, 7, and 8 of the Color Demodulator which is attached to the CRT unit.

During the PATTERN POSITION CHECK section of the Self-Test mode, the game will give a display which looks like this.

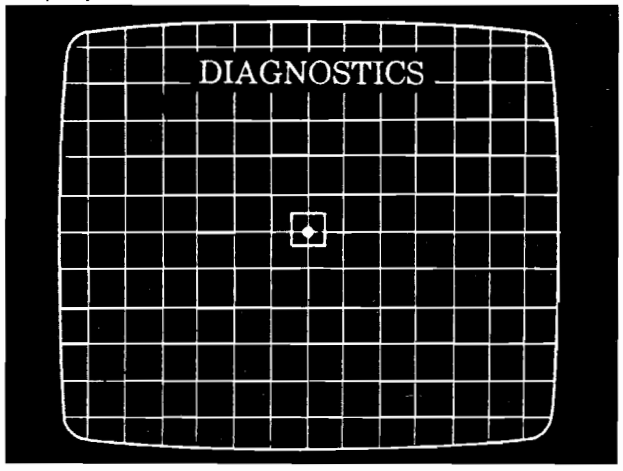

☐ In this category, the cross-hatch lines permit centering of the display on the monitor screen and allow the presentation to also be easily checked for linearity.

☐ Pushing the "START GAME" button one more time will cause the monitor display to change to the following:

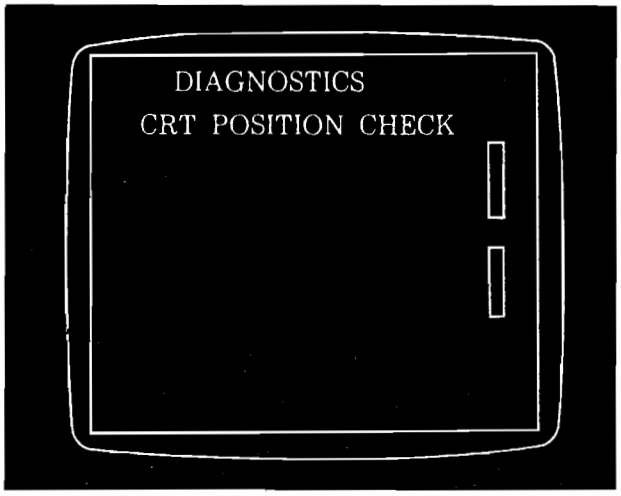

☐ In this category, the coincidence of the laser disc generated video and the PC board generated video are checked.

☐ If the two vertical lines shown in the above Figure are DIRECTLY above each other, then the two video sources (LASER DISC and PC BOARD) coincide. If the two vertical lines are NOT DIRECTLY above each other, adjust VR 1 on the large CPU PC Board until they are DIRECTLY above each other. VR 1 can be reached through the hole located in the corner of the SOUND PC Board as shown in the Figure below.

☐ Next, adjust the VR on the TV-PC Board so that the four boundary lines (the box) are located on the monitor screen as shown in the above Figure.

During the DIP SWITCH ASSIGNMENT section of the Self-Test mode, the game will give a display which looks like the following:

☐ In this category, each of the games eight position DIP SWITCHES is shown on the monitor screen and the condition of each individual switch in each DIP SWITCH is indicated. Also shown are the respective conditions of Coin Switches 1 and 2, Reserve Ships Awarded At, Attract Mode Sound, Difficulty Level, Play Timer, and whether the players will be allowed to play Continuous Games or not.

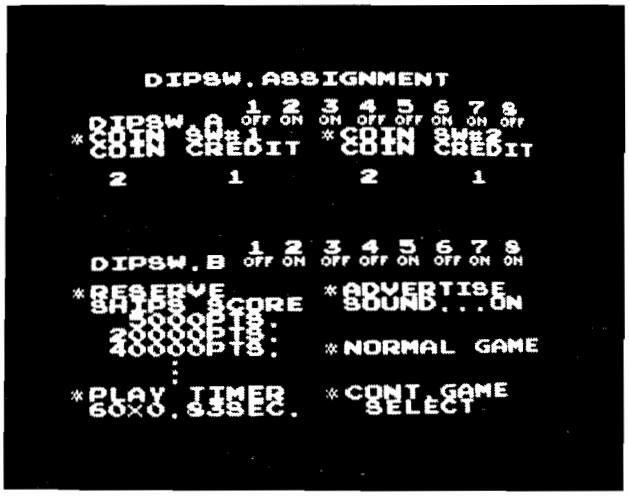

Self-Test - Dip Switch Assignment

During the BOOKKEEPING section of the Self-Test mode, the game will give a display which looks like that shown below.

CAUTION: ALL bookkeeping data **WILL BE LOST ENTIRELY** if the games power is interrupted for any reason.

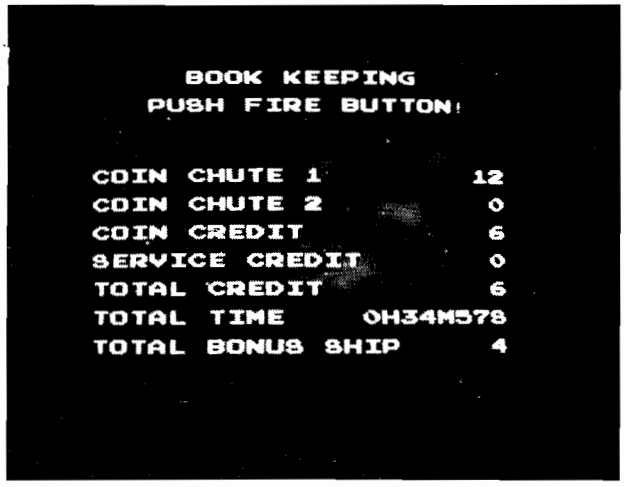

☐ In this category a basic bookkeeping function is performed. And with the selection of the "TIME REPORT" and the "SCORE REPORT", detailed breakdowns of game times and scores may be obtained.

☐ To move to the next stage of the BOOKKEEPING section, press the FIRE button or pull the TRIGGER in the games joystick. The presentation will then change to that of the following:

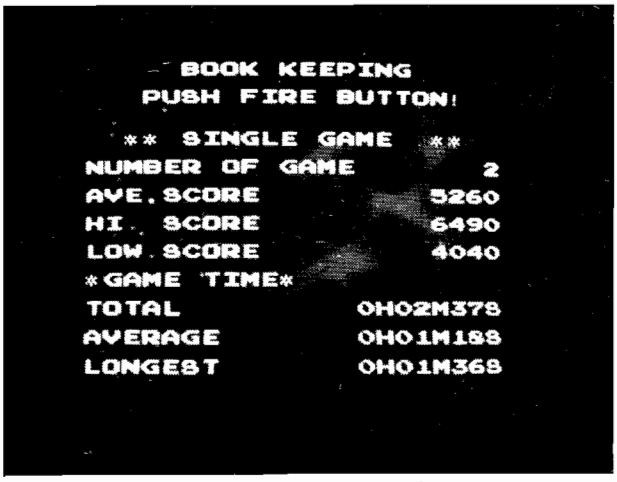

Self-Test - Bookkeeping

☐ The words "SINGLE GAME" will change to "2 CONTINUOUS GAMES" by pushing the FIRE button or pulling the TRIGGER on the joystick, and all data changes accordingly.

NOTE: This is the last test in the sequence and when you press the "START GAME" button to exit it, you will automatically go back to normal game functions IF YOU WERE IN THE **CONTINUOUS** DIAGNOSTICS TEST MODE. Otherwise, IF YOU WERE IN THE **INDIVIDUAL** DIAGNOSTICS TEST MODE, the Self-Test mode Menu will reappear on the screen.

DIFFICULTY LEVEL EXPLANATION:

The difficulty level of the game is controlled by the DIP SWITCH B on the games CPU Board. It allows the Operator to select either "NORMAL" or "HARD" game play, to determine at what points (score levels) additional SHIPS are awarded to the player, and to determine the length of "TIMED" (no-penalty) play.

ATTRACT MODE

1. The Attract mode starts:

☐ Just after power has been turned on to the game. (Self-Test switch is spring loaded to the "OFF" position.)

☐ After a Self-Test has been completed and there are no more credits left in the games memory.

☐ After a play has been finished, the score was not high enough to put the game into the High Score/Initial mode, and there are no more credits left in the games memory.

☐ After the High Score/Initial mode when there are no more credits left in its memory.

☐ In the Attract mode, the game will give the following displays centered on the monitor screen:

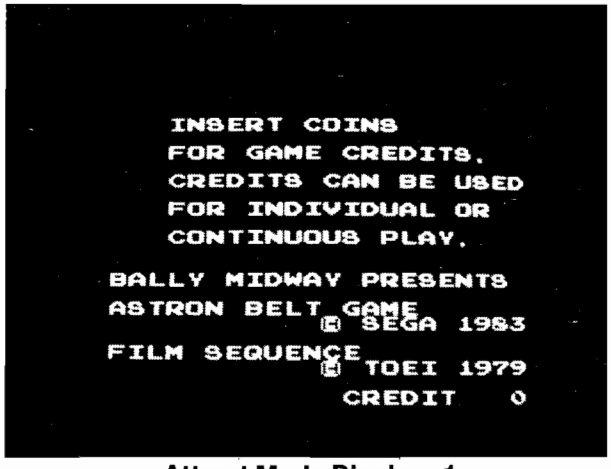

Attract Mode Display - 1

Attract Mode Display - 2

MONITOR DISPLAYS SIMULATED GAME PLAY WHILE THE WORDS "INSERT COINS" FLASH ON AND OFF AT THE TOP CENTER OF THE MONITOR SCREEN.

☐ No matter where the game is in the Attract mode sequence, it will immediately go to the following display as soon as a game has been paid for. The words "PUSH START BUTTON" flash on and off. This display will remain on the screen until the "START" button is pressed.

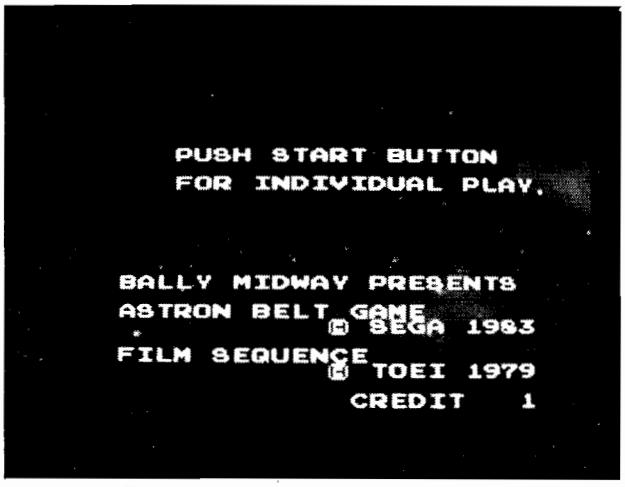

Ready-To-Play Mode Display - 1

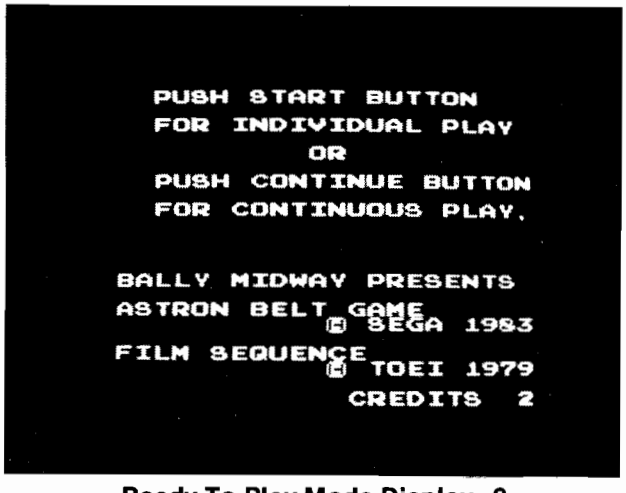

Ready-To-Play Mode Display - 2

READY-TO-PLAY MODE

1. The Ready-To-Play mode starts when enough coins have been accepted for a 1 player game.

2. The Ready-To-Play mode ends when the "START" button is pressed.

3. In the Ready-To-Play mode, the game will give the above display *centered* on the monitor screen.

4. If no "START" button is pressed, the display will remain on the screen indefinitely as shown above.

PLAY MODE

1. The Play mode begins when the "START" button is pressed.

2. The Play mode ends when all of your SHIPS have been eliminated. When this happens, "GAME OVER" is written across the center of the monitor screen.

3. **ON THE SCREEN:** The game is made up of various film sequences taken from a movie. These allow the player to fight space battles and to attack the enemy craft in and around a planet. When play begins, your SHIP is in space. You have 60 seconds of "NO PENALTY" play. During this time limit your SHIP can be repeatedly destroyed and you will be given a brand new one right away. However, **AFTER** the 60 seconds of "NO PENALTY" play is up, you are in "EXTENDED" play. If the enemy aliens blow up your SHIP now, play is over unless you have earned RESERVE SHIPS by attaining or passing certain preselected point values. (These point values are Operator selectable.)

NOTE: There are NO 2 PLAYER games in ASTRON BELT.

Also indicated on the screen during play is the TIMER (counts backward from 60 to 0 seconds), a running total of the players score, the highest game score to date, and the number of RESERVE SHIPS the player currently has.

4. **PLAY BEGINS:** Your SHIP appears in the approximate center of the screen in space, alien space craft will immediately begin attacking and flying by your SHIP. Your job is to shoot them down.

5. **ALIEN SPACE CRAFT:** These come in a variety of types and sizes. In the earlier racks, these are not very deadly. Later, however, they shoot at you in almost constant streams of fire and their aim is RIGHT ON.

6. **AIRBORNE MINE:** This only appears in the canyons that the player has to fly through. It emits a beeping alarm sound that warns it is on its way. If you do not dodge it or shoot it, it will blow you right out of the canyon!

7. ENEMY COMMAND SHIP: This only appears at the end of a rack. It only takes one shot to blow it up. If you so desire, you can try to fly under it as it approaches your position in space (in later racks it will fire at you if you do not fire at it, but it does not fire at you in the first rack). This attempt will fail, however, as the enemy command ship will self destruct as it passes over your position. This will not cost you a ship.

8. NEXT RACK: The next rack of the game uses the same movie sequences as does the first rack. The only difference is that the enemy ships do a lot more shooting at you and their aim is improved about 1000% over the first rack.

9. TYPES OF GAME PLAY: There are TWO types of game play: 1)single game play, and 2)continuous game play.

   In single game play you play until your last SHIP has been eliminated. The game will then tell you your score ranking and give you the opportunity to continue the game from the scene where your last SHIP was eliminated if you deposit more coins within a certain time limit or to chose to play another single game. If you choose the single game again, you start at the beginning, and the difficulty level of play is also at the beginners level.

   In continuous play you start out just as if you are playing a single game. However, after your last SHIP is eliminated, the game tells you your score ranking, and then gives you the opportunity to CONTINUE play from the same scene where your last SHIP was eliminated; you would deposit the required coins BEFORE the time limit expires and then press the CONTINUE PLAY button on the games control panel. Play will then resume at the exact place where your last SHIP was blown up. You also will be given an additional 60 seconds of "NO PENALTY" play as soon as play begins.

10. **SHIP:** Your SHIP can move in **ANY DIRECTION** on the screen. Its movements are controlled by the joystick controller on the games control panel.

11. **FIRE CONTROL:** This accomplished by pulling the trigger in the joystick and/or by pressing either of the FIRE buttons on the games control panel. Your ship can ONLY fire straight ahead of it. It CAN NOT fire diagonally across the screen or to the left, right, top or bottom of the screen. The control panel is designed to allow either left handed or right handed persons to play the game easily.

12. **BONUS SHIPS:** These can be awarded to the player as he reaches or passes certain preselected point values. This feature is adjustable by the games Owner/Operator.

13. **PLAY ENDS:** When your last SHIP is eliminated, "GAME OVER" is written across the center of the monitor screen.

14. **HIGH SCORE/INITIAL MODE:** If your score was high enough to become one of the 7 best scores, the game will go into the High Score/Initial mode immediately after the above display. If your score is not high enough to cause the game to allow you to enter your initials, it will still show you your score ranking. It will then either go to the Attract mode (if there are no more credits left in its memory) or into the Ready-To-Play mode (if there are still credits left in its memory). In the High Score/Initial mode the game gives a display which looks like that shown below.

High Score/Initial Mode

Use the joystick to enter your initials next to your score in the league of the best 7 players to date. Moving it left or right causes the letters to change. Pulling the trigger causes a specific letter to be locked in place. You have 60 seconds to do this.

When you've printed out your last initial, the letters "ED" appear next to it. Activate the same control you did to enter your initials one more time and this will tell the game you are through printing out your initials. You have now completed entering your initials into the RANKINGS display of the game.

NOTE: If you don't tell the game you are through printing out your initials as instructed above, the game will automatically assume you are done when the timer runs out.

After the High Score/Initial mode, the game will either go to the Attract mode (if there are no more credits left in its memory) or into the Ready-To-Play mode (if there are still credits left in its memory).

MAINTENANCE AND REPAIR

Your **NEW** game needs certain types of maintenance to keep it in good working order. CLEAN, well MAINTAINED games **attract players** and **EARN MORE PROFITS.**

The most important thing for you to remember is to run the Self-Test EVERY TIME you collect money from the coin box. **JUST LOOKING** at your game **WILL NOT** tell you if all its controls and inside parts are working correctly. The Self-Test will inform you whether or not your game is working the way it should.

The second most important thing you should remember is to clean the outside of the game and coin acceptor mechanisms on a regular basis.

CLEANING

The outside of the game cabinet plus the metal can be cleaned with any non-abrasive household cleaner. However, the front of the T.V. monitor tube and **both sides** of all other glass and plastic on or in the game MUST be cleaned with anti-static cleaner **ONLY**. For cleaning the coin acceptors; hot soapy water may be used on the plastic ones and any household cleanser may be used on the metal ones. If you wish, special coin machine cleaners that leave no residue may be purchased from your distributor.

DO NOT dry-wipe any of the plastic panels. This is because any dust that was on them can scratch their surfaces. If this has happened, anyone looking through this type of damaged plastic would feel he was looking at the game through a fog. This fogging damage CAN NOT be repaired or reversed. The ONLY solution is to **replace** the damaged piece of plastic.

FUSE REPLACEMENT

This game contains several fuses located as shown in Figure 3-1.

1. **UPRIGHT MODEL:**

   As viewed from the back, facing the cabinet, with the rear access door(s) removed; the fuses are located on the Power Chassis.

2. Replace fuses **ONLY** with the type and size listed in the Illustrated Parts Breakdown Section of your manual.

See the T.V. Monitor Manual (available on request from your distributor or the monitor manufacturer) and/or the T.V. Troubleshooting Section of this manual for information on these fuses.

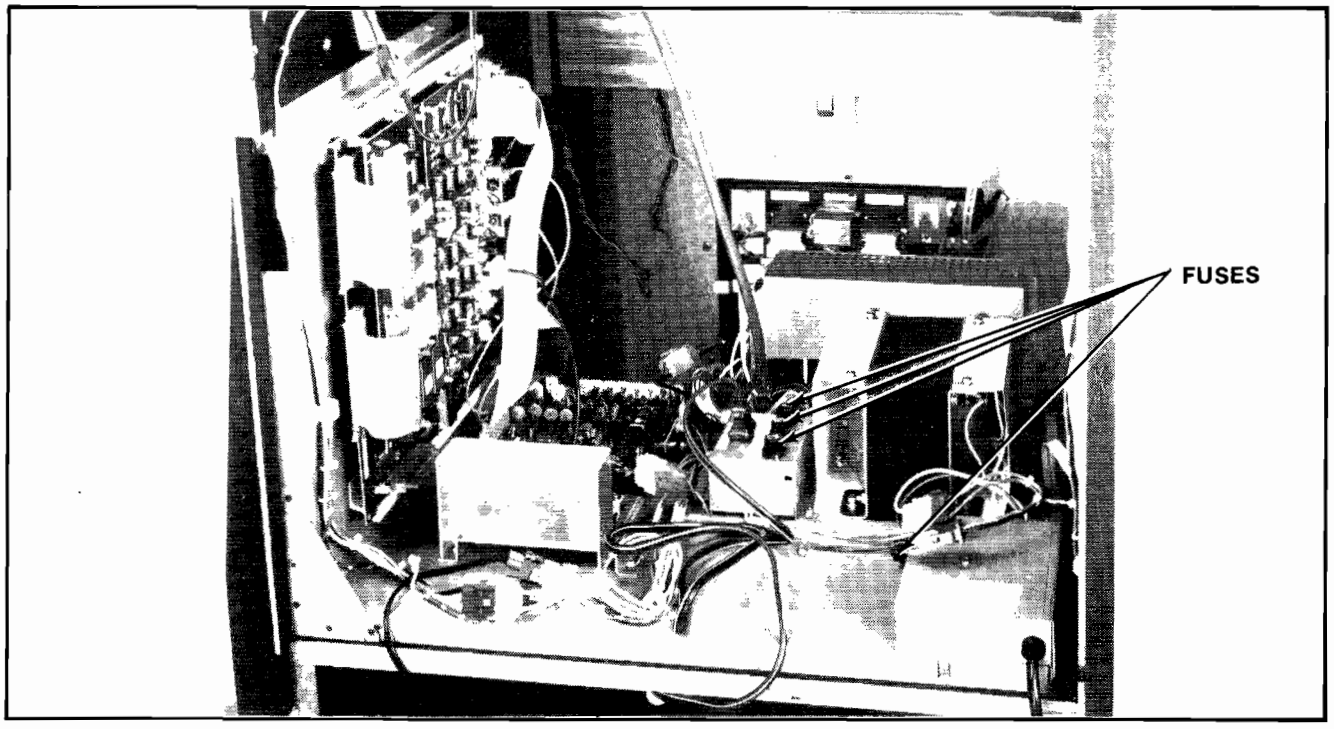

Figure 3-1 Location of Fuses

OPENING THE CONTROL PANEL

1. UPRIGHT MODEL: SEE FIGURE 3-2.

☐ The control panel is held in place by a nylon retaining strap and three latches, one on the left side, one on the right side, and one in the center of the rear of the cabinet.

They are spring loaded to provide constant positive pressure on their latch plates.

They can be reached through the coin door **AFTER turning power to the game off.**

To release the latches, lift up and toward the front center of the control panel.

Once they are released, unhook them from their latch plates.

☐ To remove the control panel:

Raise it up and tilt it toward you until you can see the cable and nylon retaining strap behind it.

Cradling the control panel between yourself and the cabinet, disconnect it from its cabling and nylon retaining strap.

The control panel is now free and can be removed.

☐ To re-install the control panel, reverse this procedure.

REMOVAL OF THE MAIN-DISPLAY-GLASS AND/OR THE DIFFUSER AND/OR THE T.V. BEZEL:

1. UPRIGHT MODEL:

NOTE: In order to do this, the control panel MUST be removed first. See the "Upright Model" procedure.

☐ **Turn the power to the game off** and remove the control panel.

☐ By putting your finger in the hole in the middle of the main-display-glass/diffuser support, you can lift them **BOTH** up slightly and pull them toward you about an inch. Now let them down just far enough so you can get hold of their top edges with your other hand and lift them **BOTH** out of the game. See Figure

☐ To remove the T.V. bezel, loosen and remove the screws that secure it in place. The T.V. bezel is now free and can be lifted out of the game cabinet.

☐ To reinstall the above removed items, reverse this procedure.

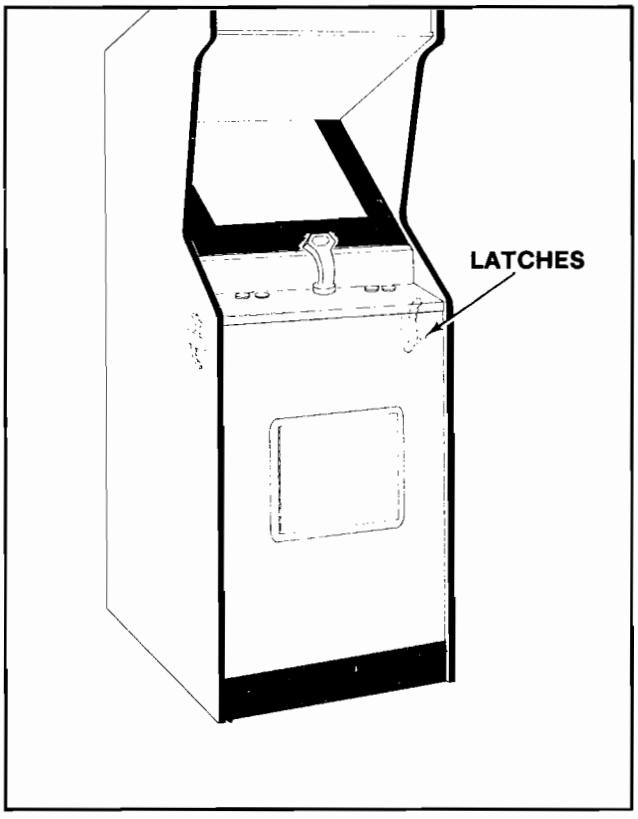

Figure 3-2 Opening the Control Panel

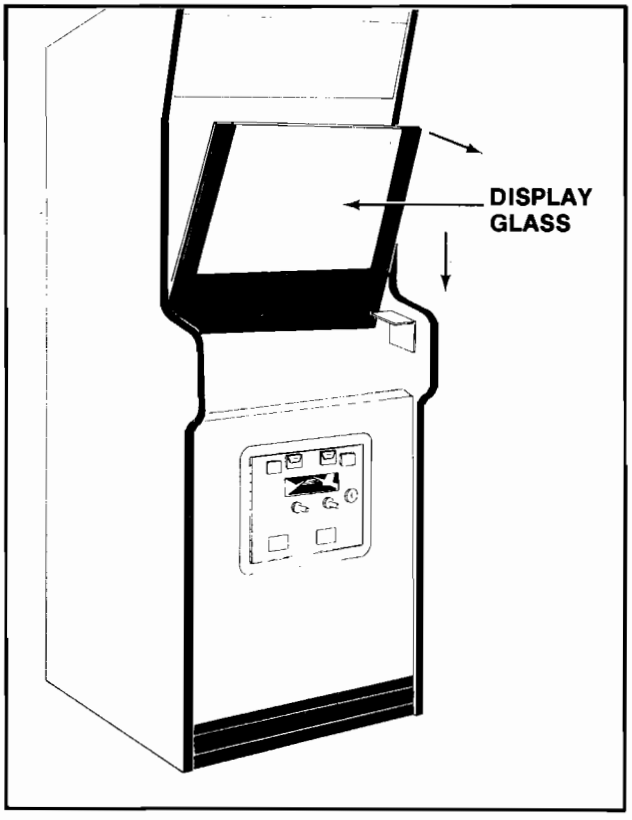

Figure 3-3 Removing the Main-Display-Glass & T.V. Bezel

T.V. MONITOR REPLACEMENT:

WARNING: High voltages may exist in any television unit, even with the power disconnected. Use EXTREME CAUTION and do not touch electrical parts or the T.V. yoke area with your hands or with metal objects held in your hands!

In addition, BE SURE TO USE HEAVY GLOVES when handling the monitor. You could cut your hands on the metal T.V. chassis without such protection.

DANGER: The T.V. monitor DOES NOT contain an isolation transformer on its chassis (it is mounted instead on the floor of the cabinet). When servicing the monitor on a test bench, YOU MUST ISOLATE THE MONITOR FROM A C VOLTAGE WITH AN ISOLATION TRANSFORMER.

1. Upright Model. See Figure 3-4.

   ☐ **Turn power off to the game.**

   ☐ Open the rear access door.

   ☐ Completely disconnect the T.V. monitor from all its cabling. DON'T FORGET THE CHASSIS GROUND WIRE.

   ☐ Before removing the T.V. monitor, the main-display-glass and T.V. bezel must be removed. See above "Upright Model" procedure.

   ☐ With the removal of only four bolts, the T.V. monitor will be loose.

   ☐ The monitor chassis rests on top of a monitor mounting shelf inside the cabinet. The monitor is removed by sliding it out the front of the cabinet. See Figure 3-4.

   ☐ To reinstall the T.V. monitor, reverse this procedure.

   ☐ After replacing the T.V. monitor, be sure to run the game Self-Test.

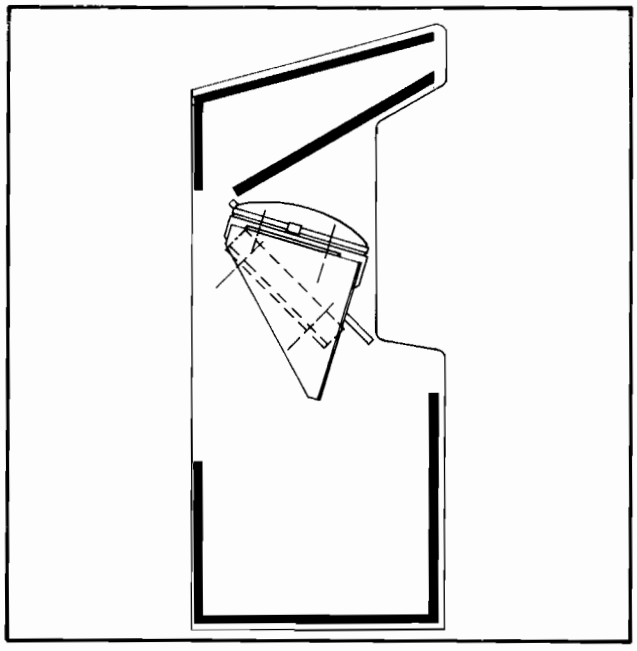

Figure 3-4 Removing the Monitor

PRINTED CIRCUIT BOARD (P.C.B.) ASSEMBLY REPLACEMENT:

1. **UPRIGHT MODEL. See Figure 3-5.**

   ☐ **Turn the power to the game off.**

   ☐ Unlock and open the rear access door(s).

   ☐ Disconnect all cabling from the P.C. board assembly.

   ☐ Remove the small P.C.B. clamp and slide the assembly from its card rack.

   ☐ To separate the P.C.B. assembly, remove the smaller P.C.B.'s from their support posts and fold them over to the side.

   ☐ To remove the P.C.B.'s secured to the power chassis, simply disconnect them from their cabling and remove their mounting screws.

   ☐ To reinstall the above P.C.B.'s, reverse this procedure.

NOTE: P.C.B.'s are all keyed and will ONLY fit into their connectors one way without forcing them. The plugs on the cable harness which connect it to the P.C.B.'s are also keyed and will ONLY go onto their connectors one way with out forcing them.

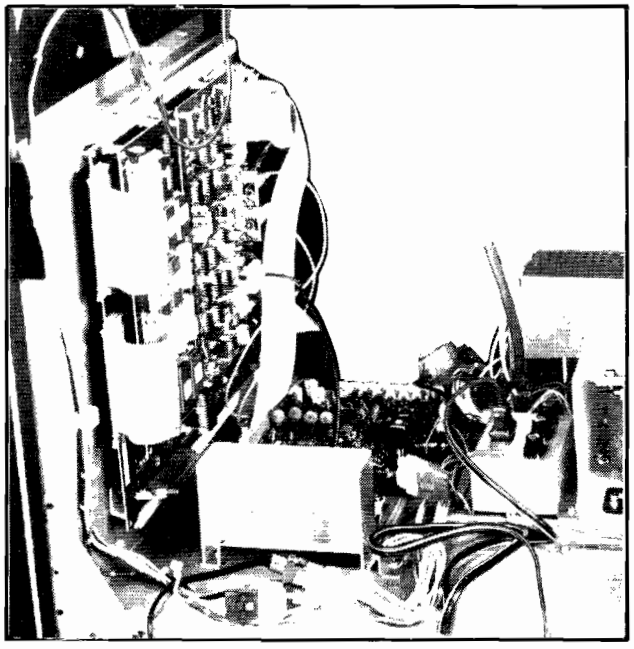

Figure 3-5 Removing the P.C.B.'s

OPENING THE ATTRACTION PANEL:

1. UPRIGHT MODEL:

☐ **Turn the power to the game off.**

☐ Opening the attraction panel:

Remove the screws which secure the top bracket in place. (They are on its top side.) See Figure 3-6.

Remove the top bracket and slide up the attraction panel. This exposes the speakers, and the fluorescent tube assembly.

To reinstall the attraction panel, reverse this procedure.

☐ The fluorescent light tube may be replaced at this time. BE CAREFUL NOT TO DROP IT.

WARNING: If you drop a fluorescent tube and it breaks, IT WILL IMPLODE! Shattered glass can fly six (6) feet or more from the implosion. Use care when replacing any fluorescent tube.

☐ Replacing the fluorescent light tube starter. See Figure 3-7.

Be sure the power to the game has been turned off.

Grasp the starter (it is on the back of the mounting bracket), give it a quarter turn, and remove it from its socket.

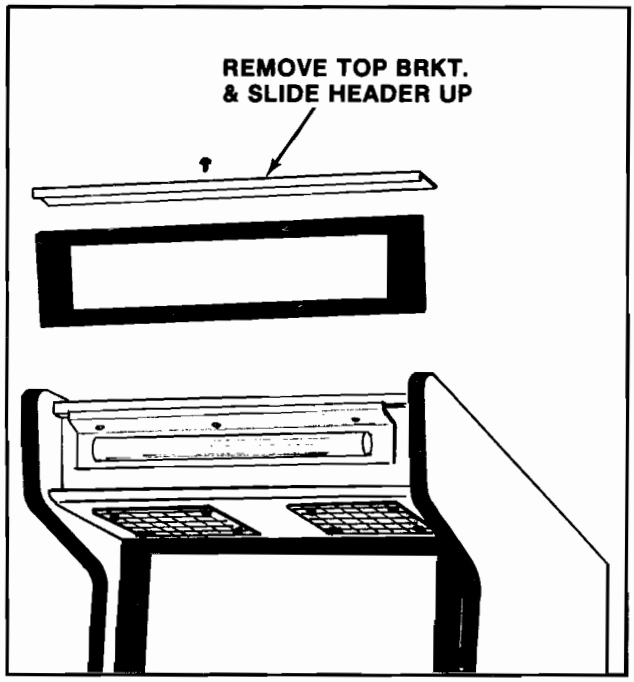

Figure 3-6 Opening the Attraction Panel

To replace the fluorescent light tube starter, reverse this procedure.

☐ Replacement of the fluorescent tube mounting bracket assembly. See Figure 3-8.

Disconnect it from its power cable.

Remove the screws which secure it in place and remove it from the cabinet.

To reinstall the fluorescent tube mounting bracket assembly, reverse this procedure.

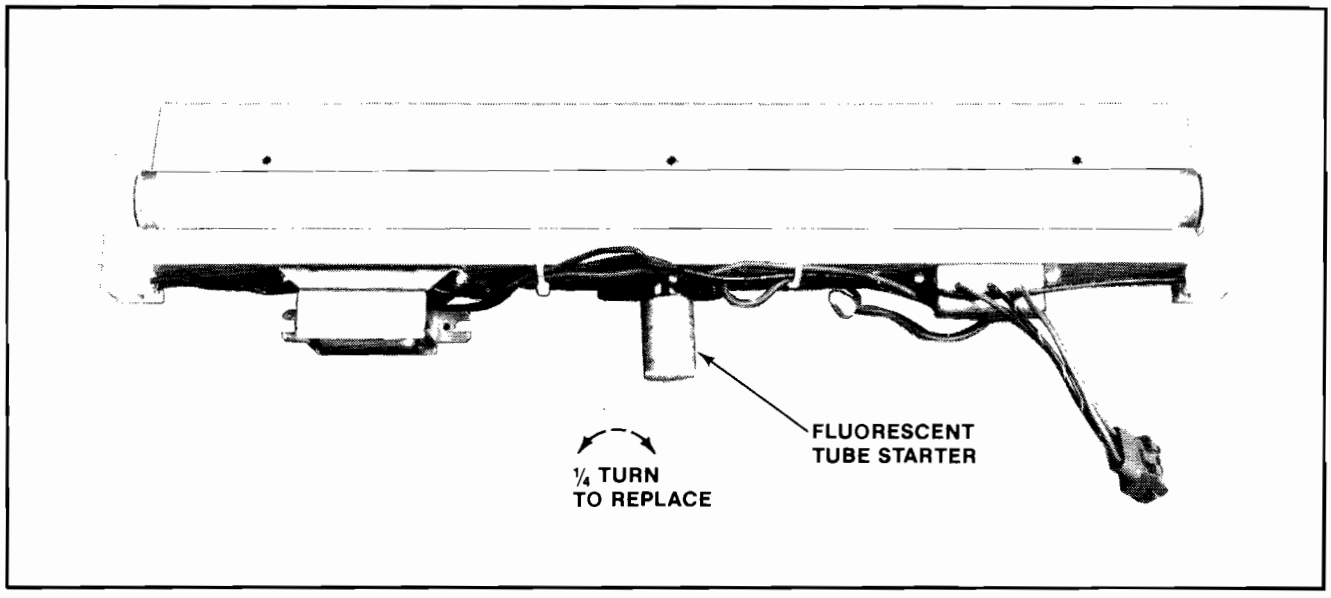

Figure 3-7 Replacing Fluorescent Tube Starter

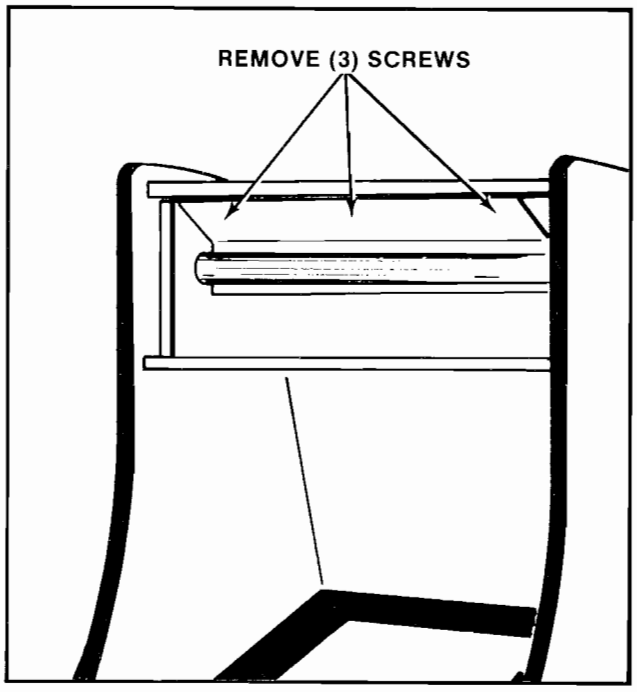

Figure 3-8 Replacing Fluorescent Tube Mounting Bracket

☐ Removing the speaker(s):

The attraction panel **MUST** be removed first. This will enable you to reach all the necessary areas where cables **MUST** be disconnected.

Disconnect the speaker(s) from all its cabling. There is one plug at a point near each speaker.

Remove the hardware which secures the speaker(s) to the cabinet and set it aside.

The speaker(s) are now free and can be slid out through the hole in the front of the game where the attraction panel was mounted.

To reinstall the speaker(s), reverse this procedure.

IV. Illustrated Parts Breakdown

No. 0A30 - ASTRON BELT UPRIGHT - FRONT

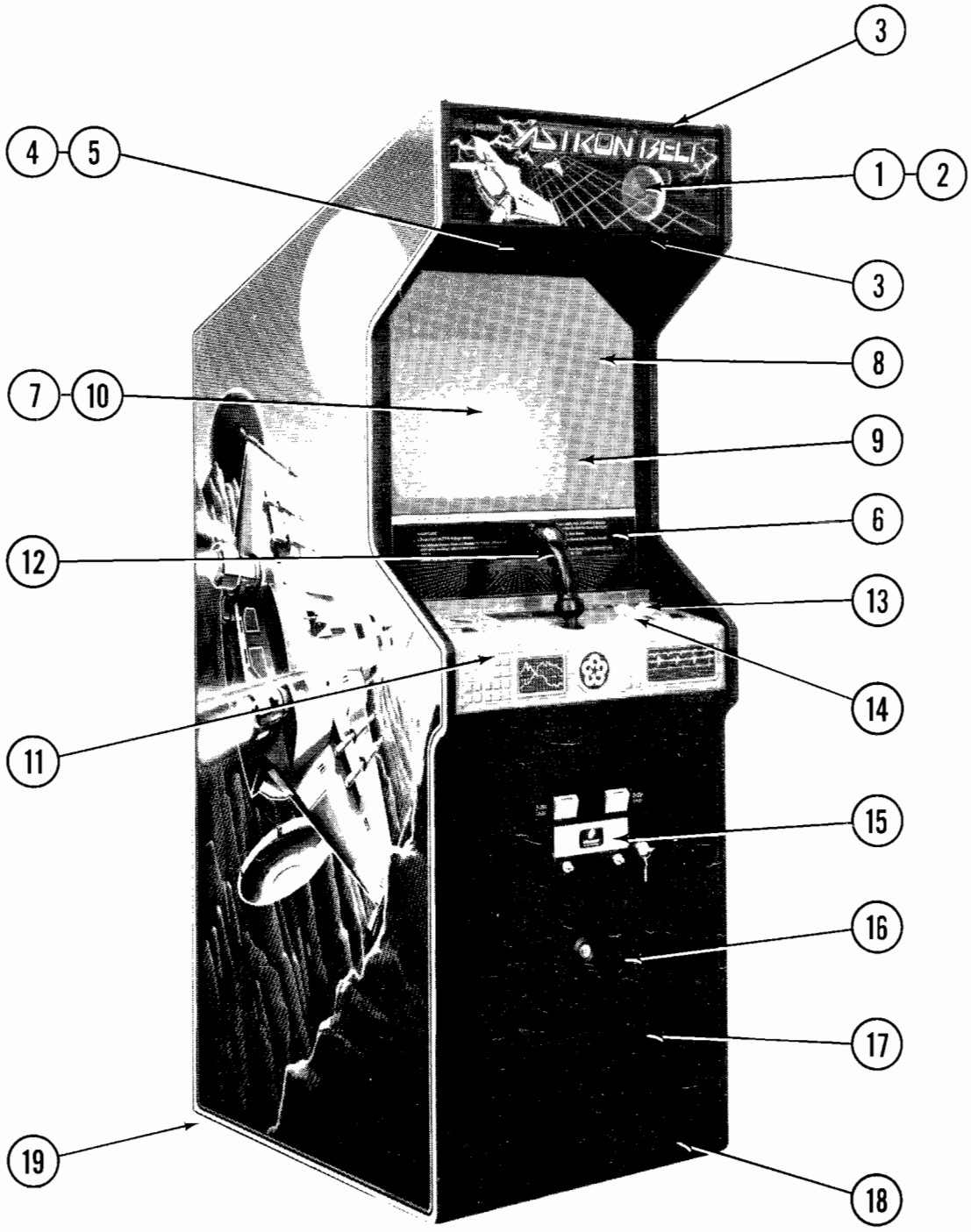

No. 0A30 - ASTRON BELT UPRIGHT - FRONT - PARTS LIST

ORDER BY PART NUMBER ONLY

ITEM	PART NO.	DESCRIPTION
1	0A30-00905-00XF	HEADER GLASS - 23"x8-3/16"x3/16"
2	AA30-00023-0000	FLUORESCENT HEADER LIGHT ASSY.
3	0574-00903-0100	HEADER RETAINING BRKT. (2 REQ'D)
	0017-00101-0138	#8x5/8 TORX TAMPER RESISTANT SCREW (10 REQ'D)
	0017-00009-0522	LONG ARM KEY T-20 (FOR ABOVE SCREW)
4	0017-00003-0513	6"x9" SPEAKER - 8 OHM, 10W. (2 REQ'D)
	AA30-00019-0000	SPEAKER CABLE ASSY.
5	0A30-00101-00XF	SPEAKER GRILLE
	0017-00101-0136	#8-32x1-1/4 CARRIAGE BOLT (8 REQ'D)
	0017-00103-0061	#8-32 HEX NUT W/SEMS (8 REQ'D)
6	0A30-00904-00XF	MAIN VIEWING GLASS - 23"x24-3/4"x3/16"
7	0A30-00903-0000	ACRYLIC DIFFUSER - 23"x24-3/4"x1/8"
8	0A30-00906-0000	SHADOW BOX BEZEL
9	0017-00042-0314	INJECTION MOLDED 19" BEZEL
10	AA30-00013-0000	MONITOR ASSY.
11	AA30-00008-0000	CONTROL SHELF WELDMENT ASSY.
	0A30-00901-0000	DECORATIVE OVERLAY
	0531-00105-0100	CONTROL SHELF MTG. BRKT. - RIGHT
	0531-00105-0200	CONTROL SHELF MTG. BRKT. - LEFT
	0555-00901-0000	PLASTIC LOCATING PIN (4 REQ'D)
	0017-00009-0534	BASSICK CLAMP (3 REQ'D)
	0017-00101-0141	#8x11/16 UNSLOT HEX HD. SCREW (10 REQ'D)
	0A30-00105-0000	CONTROL SHELF STRAP - 8-5/8" LG
	0A30-00005-0000	CONTROL SHELF CALBE ASSY.
12	A696-00022-0000	CONTROL ASSEMBLY
	A089-00020-0000	CONTROL GRIP CABLE ASSY. - 16" LG.
13	0017-00042-0257	PUSH BUTTON ASSY. - YELLOW (2 REQ'D)
14	0017-00042-0256	PUSH BUTTON ASSY. - RED (2 REQ'D)
	0017-00032-0093	PUSH BUTTON SWITCH W/HOLDER (4 REQ'D)
	0017-00103-0054	5/8-11 PAL NUT (4 REQ'D)
15	A982-00014-0005	U.S.A. - COIN DOOR ASSY. W/CABLE - 50¢
	A982-00015-0000	COIN DOOR CABLE ASSY.
16	A090-00605-0000	CASH BOX DOOR & LOCK ASSY.
	A090-00606-0000	CASH BOX & PULL ASSY.
	0090-00189-0000	CASH BOX ENCLOSURE
17	A090-00603-00XF	COIN DOOR FRAME ASSY.
	0017-00101-0121	#6-32x5/16 PHIL. TRS. HD. SCREW (8 REQ'D)
18	0017-00102-0048	3/8-16x2" LEG LEVELERS (4 REQ'D)
	0017-00103-0026	3/8-16 LEG LEVELER HEX NUTS(4 REQ'D)
19	0935-00906-0100	KICK PLATE - 23" LG
	AA30-00014-0000	SEGA SLIDE SWITCH & BRKT. ASSY. - NOT SEEN (MOUNTED ON TOP OF CASH BOX)
	0A30-00103-0000	BRACKET
	0017-00032-0051	PUSH BUTTON SWITCH (2 REQ'D)
	105E-00002-0035	PANEL MOUNT - POT (2 REQ'D)

THESE PARTS ARE **NOT** INTERCHANGEABLE EXCEPT WHERE PART NUMBERS ARE IDENTICAL

No. 0A30 - ASTRON BELT UPRIGHT - REAR ACCESS

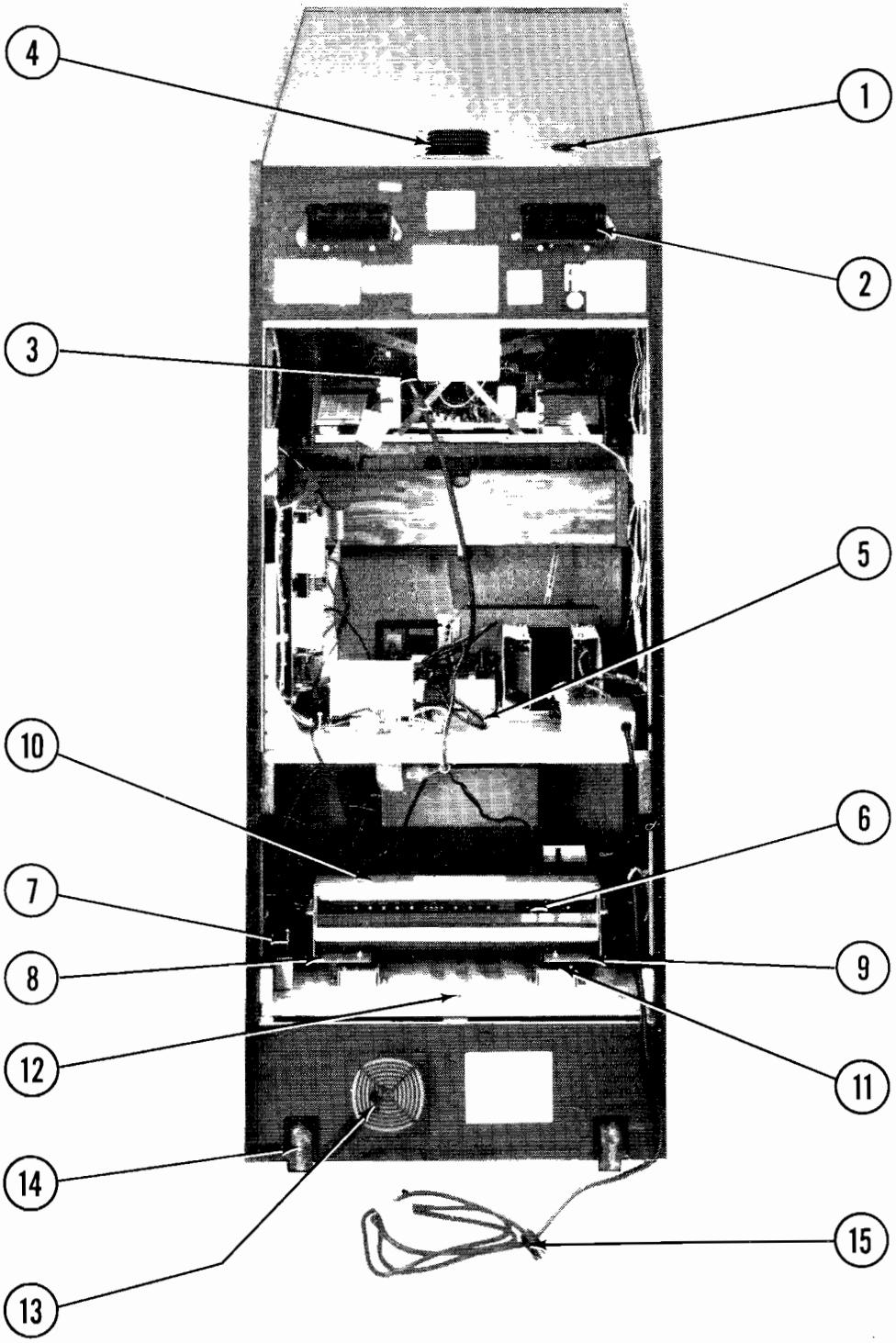

No. 0A30 - ASTRON BELT UPRIGHT - REAR ACCESS - PARTS LIST

ORDER BY PART NUMBER **ONLY**

ITEM	PART NO.	DESCRIPTION
1	AA30-00025-0000	ON/OFF SWITCH & PLATE ASSY.
	AA30-00028-0000	ON/OFF SWITCH CABLE ASSY.
2	0894-00916-0000	PLASTIC PULL & VENT (2 REQ'D)
	0017-00101-0141	#8x11/16 UNSLOT HEX HD. M.S. (8 REQ'D)
3	0017-00003-0339	ELECTROHOME - 19″ COLOR DUAL SYNC HORIZ. MTG. MONITOR (OR)
	0017-00003-0439	WELLS - GARDNER - 19″ COLOR DUAL SYNC HORIZ MTG. MONITOR
	0636-00101-0000	MONITOR RAIL (2 REQ'D)
	0555-00901-0000	PLASTIC LOCATING PIN (4 REQ'D)
	0017-00101-0141	#8x11/16 UNSLOT HEX HD. M.S. (10 REQ'D)
4	0618-00117-00XF	VENT GRILLE
	0017-00101-0138	#8x5/8 TORX TAMPER RESISTANT SCR. (4 REQ'D)
5	AA30-00027-0000	FINAL GROUND PLANE ASSY. - (SEE SEPARATE PHOTOGRAPH)
6	Q200-05017-0100	HITACHI - VIDEO DISC PLAYER
	Q200-05023-0000	PIONEER LD-V1001 - VIDEO DISC PLAYER (OR)
	Q200-05029-0000	PIONEER LD-V1000 - VIDEO CISC PLAYER
	Q200-05019-0000	ASTRON BELT - VIDEO DISK
7	0017-00009-0014	SPRING BOLT
8	AA30-00022-0200	NUT & SUPPORT BRKT. ASSY. - RIGHT
9	AA30-00022-0100	NUT & SUPPORT BRKT. ASSY. - LEFT
10	0A30-00107-0000	VIDEO DISC TIE - DOWN BRKT.
11	AA30-00039-0000	SHOCK MOUNT ASSEMBLY
	0017-00101-0141	#8x11/16 UNSLOT HEX HD. M.S. (16 REQ'D)
	0A30-00102-0000	SHOCK MOUNT BRKT. (4 REQ'D)
	0017-00041-0628	GROMMET (4 REQ'D)
	0017-00101-0109	#8x5/16 UNSLOT HEX HD. SCREW (8 REQ'D)
	0A30-00700-0000	SHOCK MOUNT SPACER (4 REQ'D)
	0017-00102-0017	¼ - 20x1-1/2″ UNSLOT HEX HD. BOLT (4 REQ'D)
	0017-00104-0005	SPLIT WASHER (4 REQ'D)
	0017-00103-0018	¼ - 20 HEX NUT (4 REQ'D)
12	AA30-00024-0000	SHELF SUPPORT BRKT. ASSY.
	0017-00102-0017	¼ - 20x1-1/2 UNSLOT HEX HD. BOLT
	0017-00104-0014	7/8″ DISH WASHER
13	AA30-00020-0000	MTG. PLATE TO FAN ASSY.
	0151-00081-0000	FAN - AXIAL COOLING
	0775-00110-00XF	FAN PLATE
	0017-00003-0443	FAN GRILLE & FOAM FILTER
	0017-00072-0086	POP RIVET (4 REQ'D)
	0017-00101-0138	#8x5/8 TORX TAMPER RESISTANT SCR. (4 REQ'D)
	AA30-00034-0000	MOLDED FAN CABLE ASSY.
14	A961-00007-0000	CASTER ASSEMBLY (2 REQ'D)
15	0017-00003-0451	LINE CORD
		ADDITIONAL PARTS LIST
	A097-00010-0000	REAR DOOR LOCK ASSY.
	AA30-00015-0000	MASTER CABLE W/BRKT. ASSY.
	AA30-00017-0000	HIGH VOLTAGE CABLE ASSY.
	AA30-00033-0000	VIDEO SIGNAL CABLE ASSY.

THESE PARTS ARE **NOT** INTERCHANGEABLE EXCEPT WHERE PART NUMBERS ARE IDENTICAL

NO. 0A30 - ASTRON BELT UPRIGHT - CONTROL GRIP ASSY.

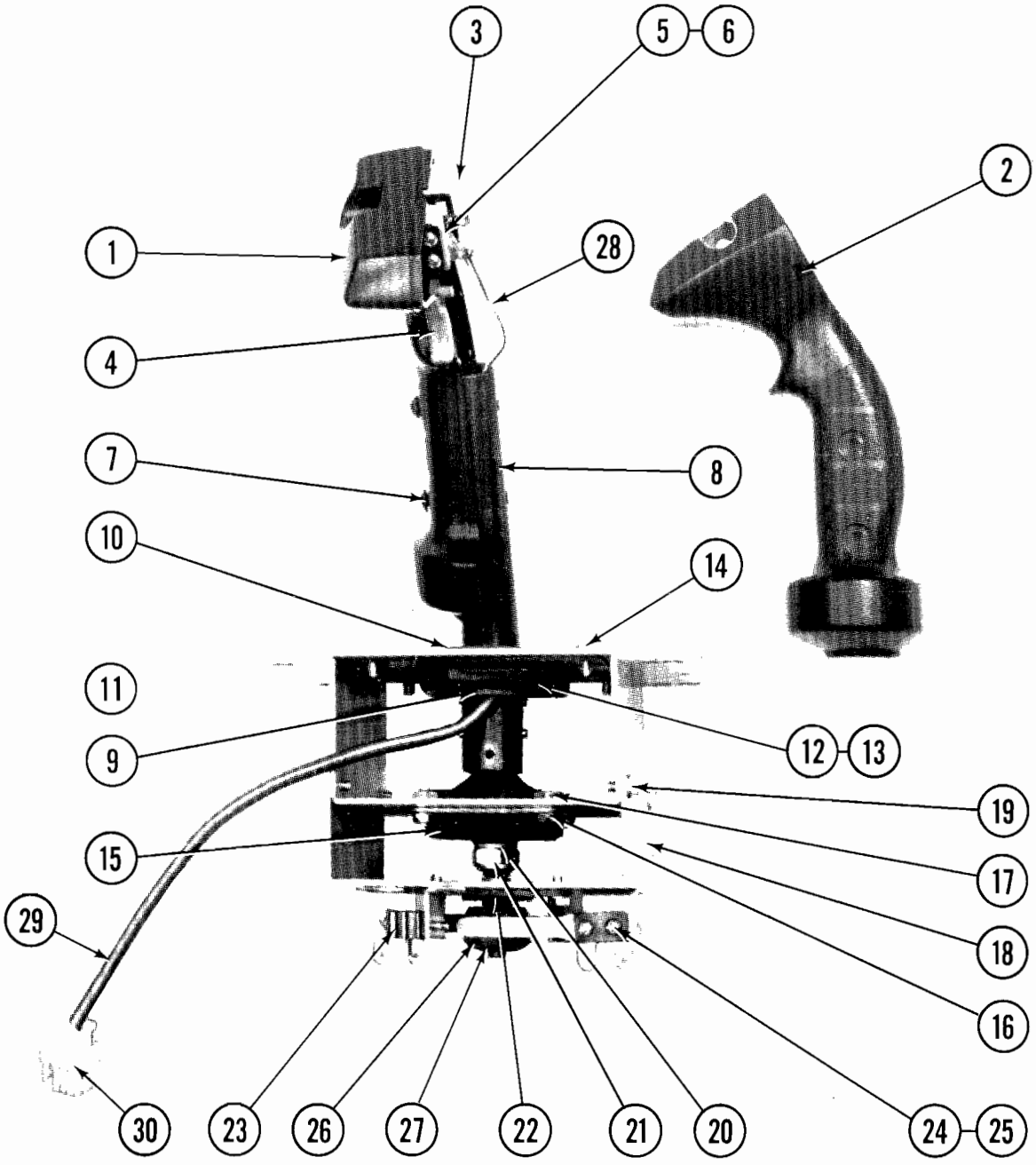

NO. 0A30 -ASTRON BELT UPRIGHT -CONTROL GRIP ASSY. -PARTS LIST

ORDER BY PART NUMBER **ONLY**

ITEM	PART NO.	DESCRIPTION
1	0873-00900-0200	BLACK CONTROL GRIP - LEFT
2	0873-00900-0100	BLACK CONTROL GRIP - RIGHT
3	A030-00902-0000	LENS - CONTROL GRIP
4	0628-00906-0000	TRIGGER
5	0873-00123-00XF	TRIGGER SWITCH BRKT.
	0017-00101-0083	#4-20x3/8 PHIL. PAN HD. SCR. (2 REQ'D)
6	A628-00028-0000	GRIP - TRIGGER SWITCH ASSY.
	0020-00202-0000	SWITCH PLATE
	0017-00101-0528	#5-40x3/4 PHIL. RND. HD. M.S. (2 REQ'D)
7	0017-00101-0149	#10-32x3/8 TORX TAMPER RESISTANT BUTTON HD. SCREW (5 REQ'D)
8	A696-00019-0000	TUBING TO PIVOT PIN ASSY.
9	0696-00907-0000	SLEEVE
10	0628-00904-0000	SLIDE
11	A639-00020-0000	CENTERING BRKT. WELD ASSY.
12	0873-00113-00XF	BUMPER MTG. BRKT.
13	0873-00910-0000	BUMPER
14	0017-00101-0615	#10-32x3/8 SLT. PAN HD. M.S. (4 REQ'D)
15	0628-00905-0000	GROMMET
16	0017-00101-0598	#8-32x3/8 SLT. HEX HD. M.S. (4 REQ'D)
17	0017-00103-0081	#10-32x5/16 HEX NUT W/SEMS (4 REQ'D)
18	A696-00025-0000	STOP PLATE & SWITCH BRKT. ASSY.
19	0017-00101-0598	#8-32x5/16 SLT. HEX HD. M.S. (4 REQ'D)
20	0017-00104-0034	5/8;" FLAT WASHER
21	0017-00103-0102	7/16-14 LOCK NUT
22	0639-00906-0000	WEAR PLATE
23	A355-00003-0000	MOLDED SWITCH ASSY. (4 REQ'D)
24	0020-00202-0000	SWITCH PLATE ASSY. (4 REQ'D)
25	0017-00101-0527	#5-40x5/8 PHIL. RND. HD. M.S. (8 REQ'D)
26	0921-00700-0000	ACTUATOR
27	0017-00100-0025	1/4" E-RING
28	A089-00020-0000	CONTROL GRIP CABLE ASSY. - 16" LG
29	0010-00266-0100	STRAIN RELIEF EXT. SPRING
30	0017-00021-0299	2 PIN CONNECTOR

THESE PARTS ARE **NOT** INTERCHANGEABLE EXCEPT WHERE PART NUMBERS ARE IDENTICAL

NO. 0A30 - ASTRON BELT UPRIGHT - FINAL GROUND PLANE ASSY.

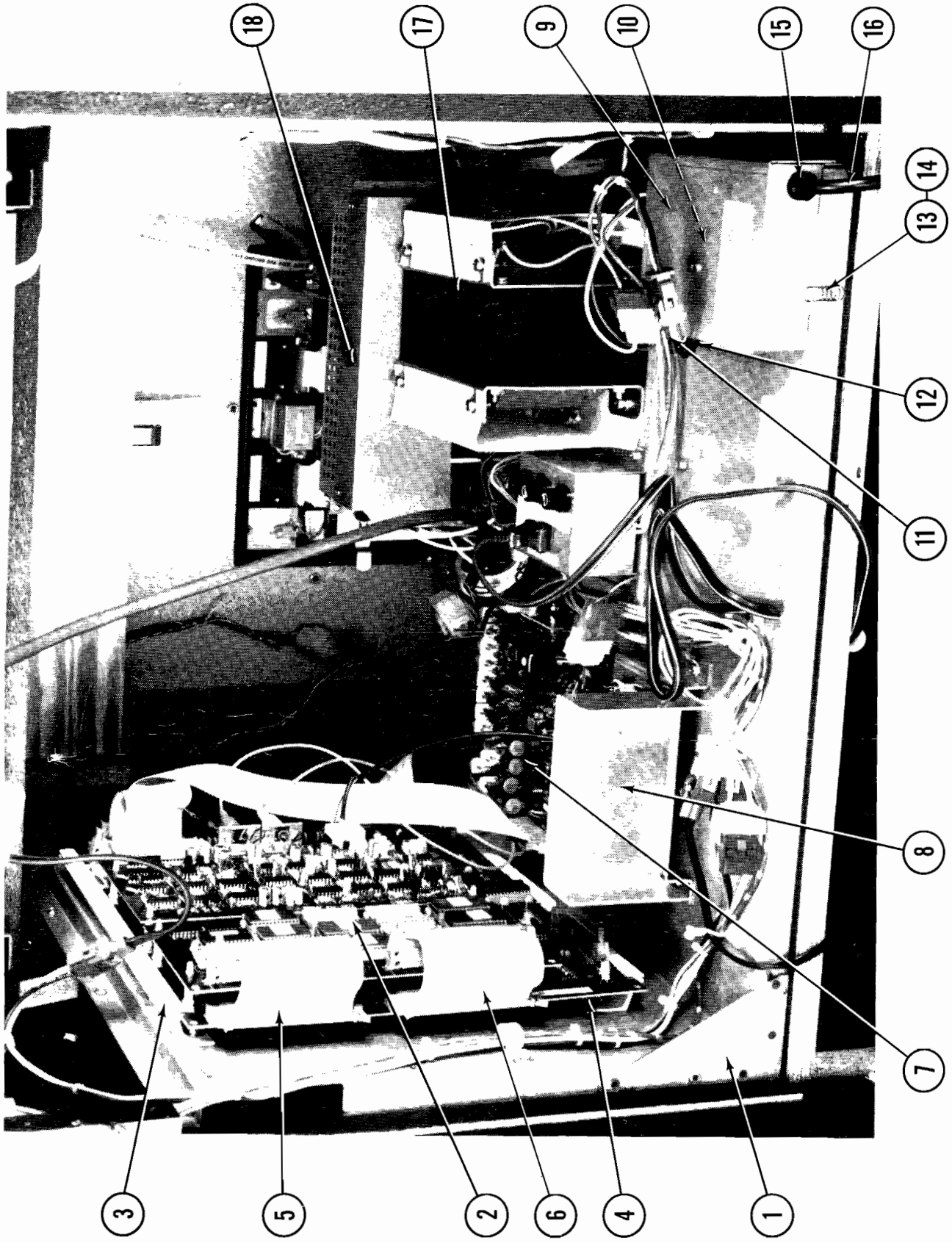

NO. 0A30 - ASTRON BELT UPRIGHT - FINAL GROUND PLANE ASSY. - PARTS LIST

ORDER BY PART NUMBER **ONLY**

ITEM	PART NO.	DESCRIPTION
1	AA30-00026-0000	GROUND PLANE SUB ASSY. - BRACKET
2	Q834-05194-0200	GAME BOARD P.C. ASSY. - (MOD "A") (OR)
	Q834-05194-0600	PIONEER LOGIC BOARD P.C. ASSY. - (MOD "A")
3	0624-00902-0200	P.C. SUPPORT BRKT. - 10″ LG (2 REQ'D)
4	0624-00902-0300	P.C. SUPPORT BRKT. - 2-1/2″ LG (2 REQ'D)
	0017-00101-0754	#8-32x3/8 SLT. HEX HD. SCREW (10 REQ'D)
	0017-00104-0026	#8 FLAT WASHER (10 REQ'D)
5	Q600-05039-0000	26 - PIN CABLE ASSY.
6	Q600-05041-0000	25 - PIN CABLE ASSY.
7	Q834-05175-0000	PCA, COLOR DEMODULATOR
	0017-00101-0074	#6x1″ PHIL. PAN HD. SCREW (4 REQ'D)
8	AA30-00032-0000	AMPLIFIER & CABLE ASSY.
	0017-00101-0067	#6x3/8 PHIL. PAN HD. SCREW (4 REQ'D)
9	0A30-00111-0000	J-BOX COVER
10	AA30-00041-0000	FILTER ASSY. W/PINK CLIP - LOCATED UNDER COVER
	0017-00042-0609	PLASTIC - GROMMET
11	0017-00003-0433	FUSE HOLDER
	Q514-00053-0000	5 AMP SLO-BLO FUSE
12	0017-00042-0623	SNAP BUSHING
	AA30-00035-0000	FILTER CABLE ASSY.
13	0017-00032-0078	INTERLOCK SWITCH
14	0010-00274-0217	COMPRESSION SPRING
15	0017-00042-0315	STRAIN RELIEF BUSHING
16	0017-00003-0451	LINE CORD - 10 FT. LONG
17	Q834-00513-0000	POWER SUPPLY ASSY.
18	AA30-00043-0000	SHIELD ASSY.
	0017-00101-0096	#6x3/8 SLT. HEX HD. SCREW (2 REQ'D)
	Q600-05035-0000	AUDIO CABLE ASSY. (2 REQ'D)
	Q600-05042-0000	VIDEO CABLE ASSY.

THESE PARTS ARE **NOT** INTERCHANGEABLE EXCEPT WHERE PART NUMBERS ARE IDENTICAL

FRONT DOOR ASSEMBLY - U.S.A. 50¢

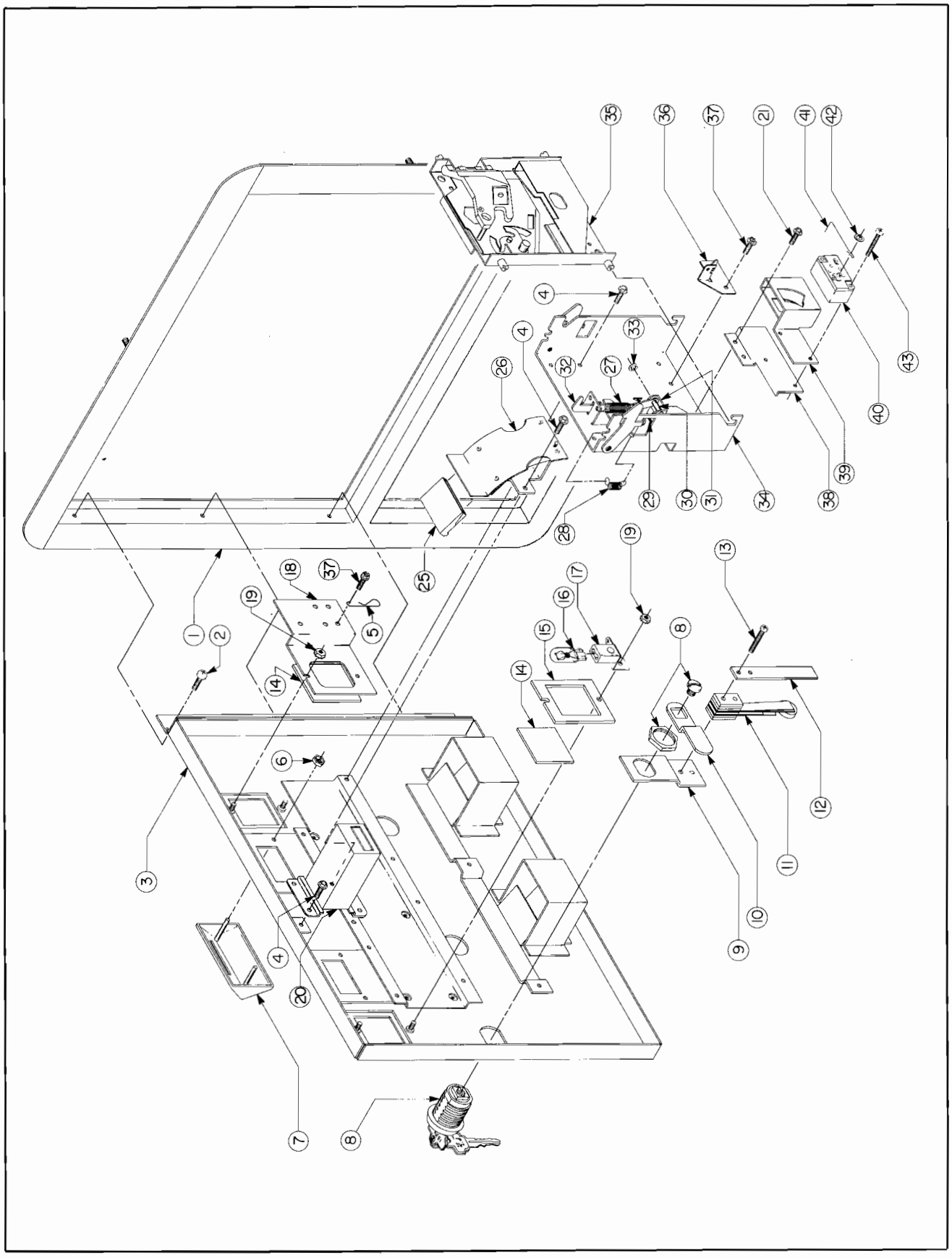

FRONT DOOR ASSEMBLY - U.S.A. 50¢ - PARTS LIST

ORDER BY PART NUMBER **ONLY**

ITEM	PART NO.	DESCRIPTION
1	A090-00603-00XF	DOUBLE ENTRY COIN DOOR FRAME
2	0017-00101-0121	#6-32x5/16 PHIL. TRS. HD. SCR. (3 REQ'D)
3	A090-00073-02BK	DOUBLE ENTRY COIN DOOR W/DRESS PLATE
4	0017-00101-0123	#8x1/4 UNSLOT HEX HD. SCREW (12 REQ'D)
5	0017-00007-0019	KEY HOOK
6	0017-00103-0059	PUSH NUT (4 REQ'D)
7	0090-00912-0000	COIN ENTRY PLATE - 25¢ (2 REQ'D)
8	A097-00005-0000	DOOR LOCK & KEY W/SCREW & NUT (OR)
	A097-00006-0000	DOOR LOCK & KEY W/SCREW & NUT
9	0090-00128-00XF	DOOR TILT SWITCH BRKT.
10	0017-00005-0041	DOOR CAM
11	A090-00095-0000	DOOR TILT SWITCH
12	0090-00126-03XF	SWITCH BACK-UP PLATE
13	0017-00101-0525	#5-40x9/16" PHIL. HD. M.S. (2 REQ'D)
	A090-00096-0000	DOOR TILT SWITCH & BRKT. ASSY. (ITEMS 9 & 11 THRU 13)
14	0090-00903-4800	PLEXI PLATE 2x25 CENT 1 PLAY (2 REQ'D)
15	0090-00143-00XF	COIN PLEX RETAINER
16	0017-00003-0219	12 VOLT LAMP - G.E. #194 (2 REQ'D)
17	0017-00031-0048	WEDGE SOCKET W/BRKT. (2 REQ'D)
18	A090-00100-0000	BRKT. ASSY.
19	0017-00103-0084	#6-32 HEX NUT W/SEMS (4 REQ'D)
20	A090-00089-0000	COIN METER W/DIODE
21	0017-00101-0124	#6x1/4 UNSLOT HEX HD. SCR. (4 REQ'D)
25	0090-00911-0000	INSULATOR (2 REQ'D)
26	A090-00112-0000	COIN CHUTE & INSULATOR ASSY. (2 REQ'D)
27	0010-00134-0000	SPRING
28	0010-00181-0000	SPRING
29	0017-00007-0083	1/8x1-5/8 ROLL PIN
30	0090-00129-00XF	PIVOT POST
31	0090-00167-00XF	PIVOT LEVER
32	0090-00182-00XF	REJECT LEVER
33	0017-00100-0018	E-RING
	A090-00088-0000	REJECT LEVER ASSY. (2 REQ'D) (ITEMS 30 THRU 33)
34	A090-00117-0000	COIN ACCEPTOR FRAME ASSY. (2 REQ'D)
35	0017-00005-0003	COIN ACCEPTOR W/STRING CUTTER (2 REQ'D) (OR)
	0017-00005-0211	COIN ACCEPTOR W/ANTI STRING DEVICE (2 REQ'D) (OR)
	0017-00005-0214	COIN ACCEPTOR W/STRING CUTTER (2 REQ'D)
36	A090-00064-0000	ANTI-PENNY DEVICE
37	0017-00101-0099	#6x1/4 SLT. HEX HD. M.S. (2 REQ'D)
38	0090-00162-00XF	COIN SWITCH MTG. BRKT.
39	0017-00005-0203	COIN SWITCH CHUTE
40	0017-00005-0195	COIN SWITCH
41	0010-00599-0000	COIN SWITCH WIRE
42	0017-00007-0015	PUSH-ON RING
	A090-00059-0400	COIN SWITCH & WIRE ASSY. (ITEMS 40 THRU 42)
43	0017-00101-0147	#4-40x3/4 PHIL. PAN HD. M.S. (2 REQ'D)
	A090-00077-0000	COIN GUIDE & SWITCH ASSY. (ITEMS 38 THRU 43)

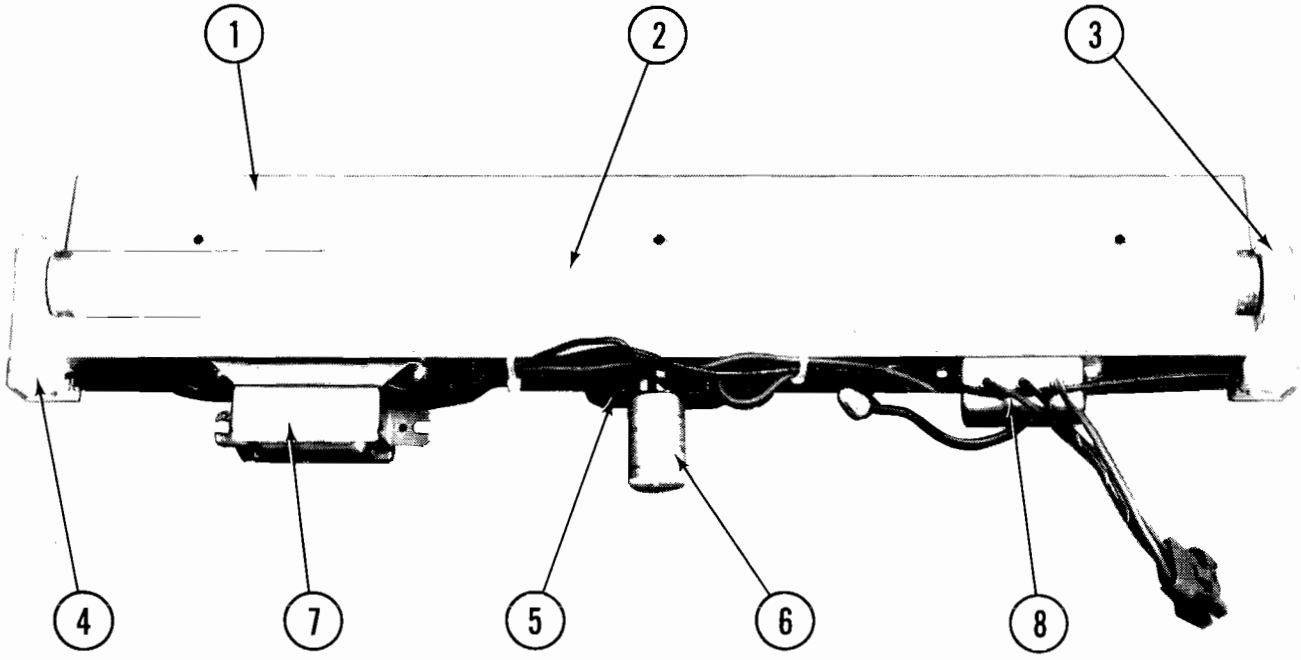

HEADER FLUORESCENT FIXTURE ASSEMBLY - PARTS LIST

ORDER BY PART NUMBER **ONLY**

ITEM	PART NO.	DESCRIPTION
1	0A30-00104-0000	FLUORESCENT BRKT.
2	0017-00003-0043	18″ COOL WHITE FLUOR LAMP
3	0017-00003-0445	LAMP LOCKS (2 REQ'D)
4	0017-00031-0036	FLUOR. SOCKET (2 REQ'D)
5	0017-00003-0412	FLUOR. STARTER SOCKET W/12″ LEAD
	0017-00101-0573	#6-32x1/2 PHIL. RND. HD. M.S. (4 REQ'D)
	0017-00104-0009	#6 EXT WASHER (4 REQ'D)
6	0017-00003-0019	STARTER
7	0017-00003-0026	BALLAST
8	A961-00042-0000	FLUOR. LINE FILTER ASSY.
	0017-00101-0598	#8-32x5/16 SLT. HEX HD. SCR. (4 REQ'D)

THESE PARTS ARE **NO**T INTERCHANGEABLE EXCEPT WHERE PART NUMBERS ARE IDENTICAL

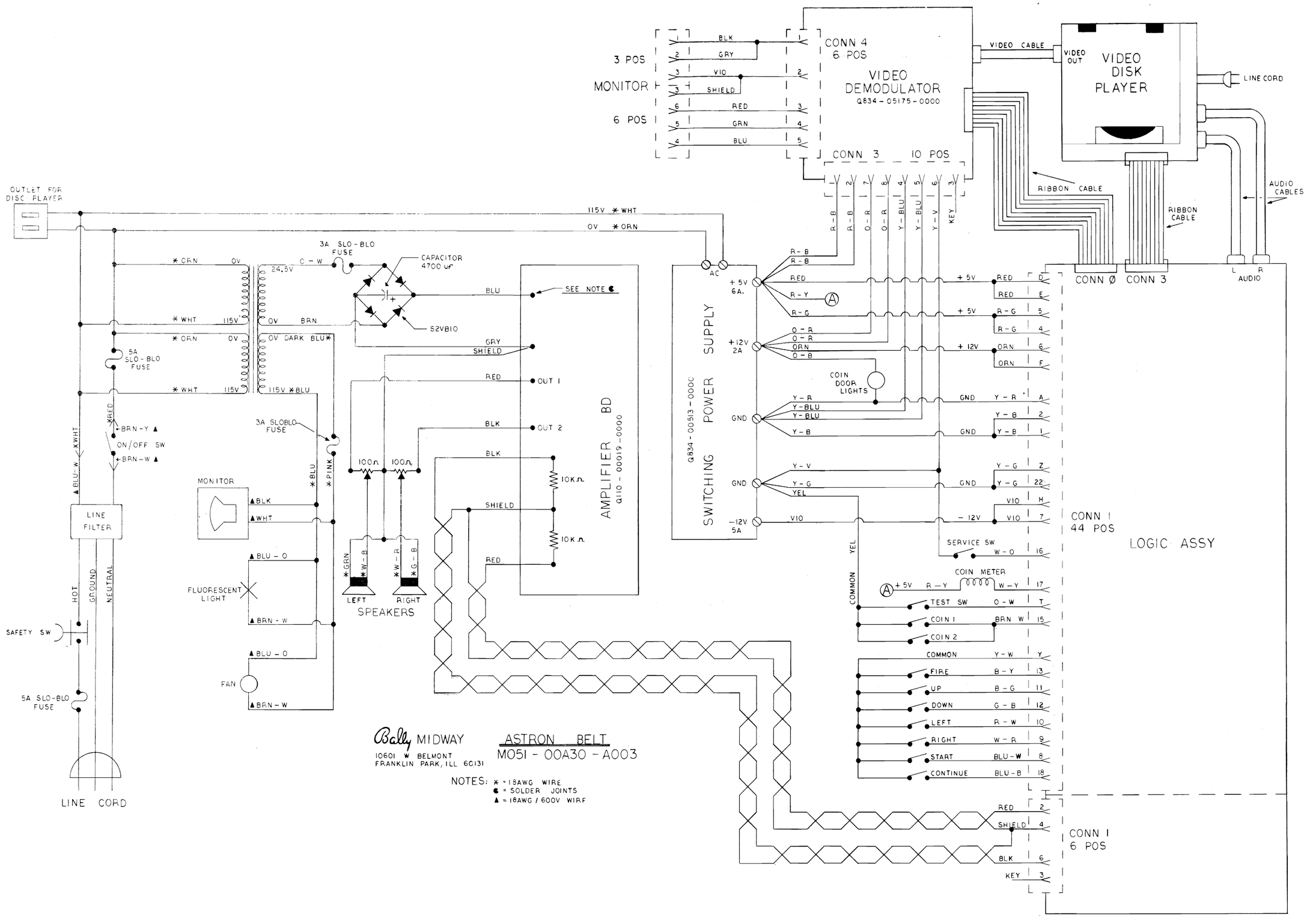
3 POS
MONITOR
6 POS
BLK
GRY
VIO
SHIELD
RED
GRN
BLU
CONN 4
6 POS
VIDEO DEMODULATOR
Q834 - 05175 - 0000
CONN 3 10 POS
VIDEO CABLE
VIDEO OUT
VIDEO DISK PLAYER
LINE CORD
RIBBON CABLE
AUDIO CABLES
CONN Ø
CONN 3
L R AUDIO
OUTLET FOR DISC PLAYER
115V * WHT
0V * ORN
3A SLO-BLO FUSE
CAPACITOR 4700 uf
24.5V
0 - W
BLU
SEE NOTE
S2VB10
BRN
0V DARK BLU*
GRY
SHIELD
5A SLO-BLO FUSE
115V *BLU
RED
OUT 1
BLK
OUT 2
3A SLOBLO FUSE
BRN-Y
ON/OFF SW
BRN-W
BLU-W
*WHT
MONITOR
*BLU
*PINK
100Ω
10KΩ
AMPLIFIER BD
Q110 - 00019 - 0000
LINE FILTER
HOT
GROUND
NEUTRAL
SAFETY SW
5A SLO-BLO FUSE
LINE CORD
FLUORESCENT LIGHT
FAN
*GRN
*W-B
*W-R
*G-B
LEFT
RIGHT
SPEAKERS
AC
+5V 6A.
+12V 2A
GND
-12V 5A
SWITCHING POWER SUPPLY
Q834 - 00513 - 0000
COIN DOOR LIGHTS
+5V
+12V
-12V
SERVICE SW
COIN METER
TEST SW
COIN 1
COIN 2
COMMON
FIRE
UP
DOWN
LEFT
RIGHT
START
CONTINUE
CONN 1
44 POS
LOGIC ASSY
CONN 1
6 POS
Bally MIDWAY
10601 W BELMONT
FRANKLIN PARK, ILL 60131
ASTRON BELT
M051 - 00A30 - A003
NOTES: * = 18AWG WIRE
= SOLDER JOINTS
▲ = 18AWG / 600V WIRE

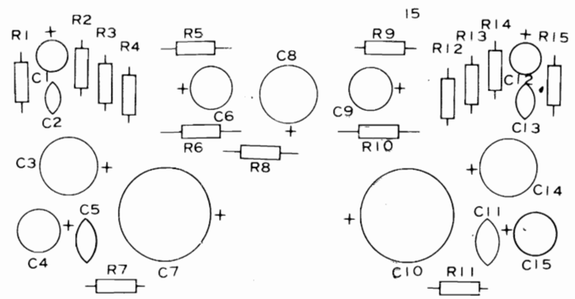

SEGA MADE IN JAPAN 834-0121

REVISIONS

PROJECT ENG:			USED ON ASTRON BELT	Bally / MIDWAY MFG. CO. FRANKLIN PK. ILL.
DO NOT SCALE DWG.		HEAT TREAT	SCALE FULL	NO. REQ'D 1 PER
DIM. TOLERANCES UNLESS SPECIFIED CONCENTRICITY T.I.R. .003 FRACTIONAL ± 1/64 DECIMAL ± .005 HOLE DIA + .002 .000	DRN. TBB CKD. DATE 11/9/83	MAT'L. FINISH	AUDIO POWER AMP P.C. ASSEMBLY DWG Q834-00513-0000	PART NO. M051 - 00A30 - A033

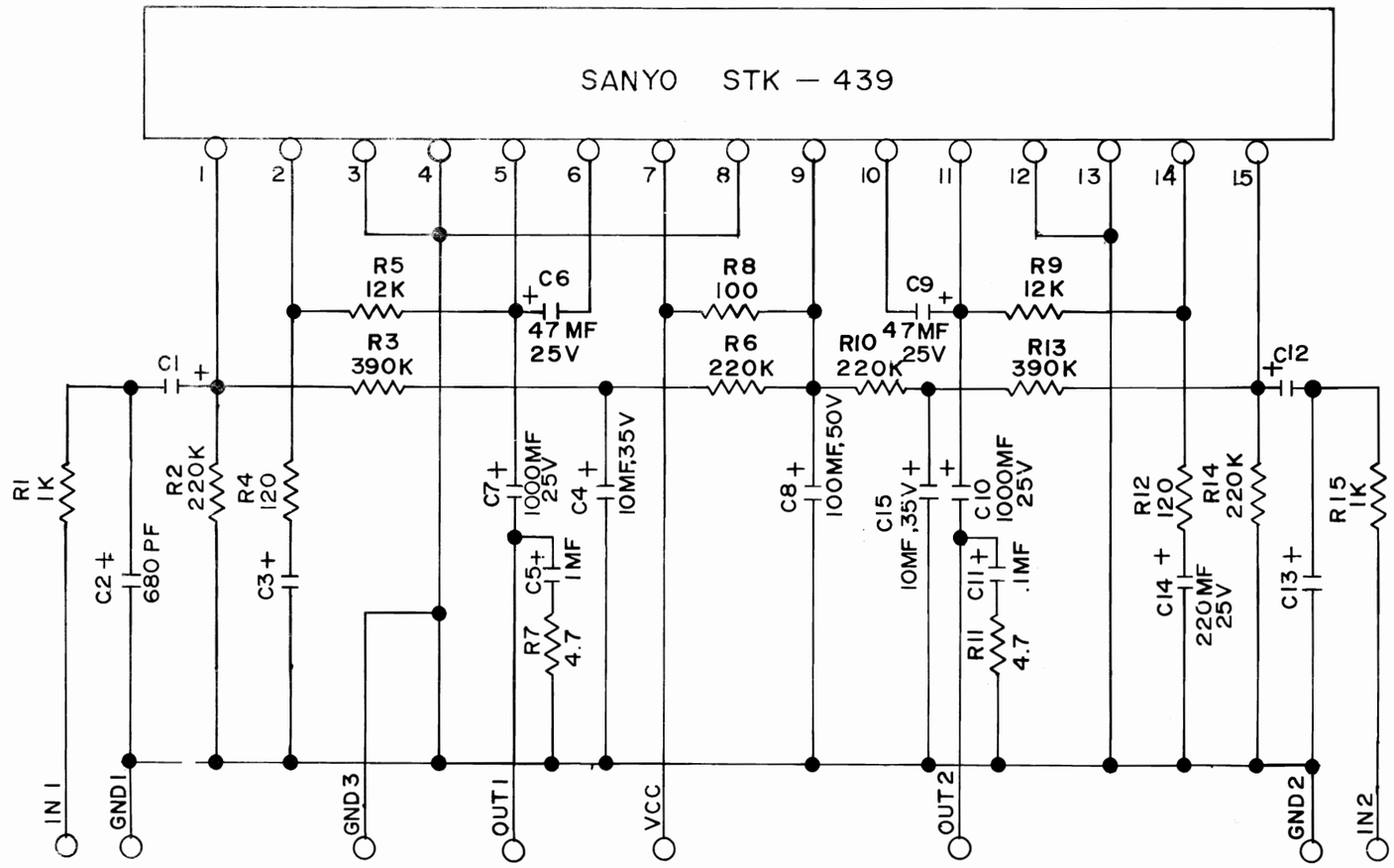

THIS DWG. IS CONFIDENTIAL & PROPERTY OF MIDWAY MFG. CO.

DIM. TOLERANCES	FIRST USED ON ASTRON BELT			MIDWAY MFG. CO. FRANKLIN PK., IL. 60131 A BALLY CO.	REVISIONS
UNLESS OTHERWISE SPEC.	DRN M.M.	DATE 11/9/83	SCALE FULL		
CONCENTRICITY T.I.R. . 002	MECH CHK	MAT'L		POWER AMPLIFIER	PART NO.
FRACTIONAL ..... ± .1/64				Q834-00513-0000	M0·5·1 -0·0·A·3·0 -A·0·3·4
DECIMAL ..... ± .005					
HOLE DIA. .... + .002 — .000	ELEC CHK	FINISH			
ANGLE ..... ± 1/2°					
DO NOT SCALE DWG.					

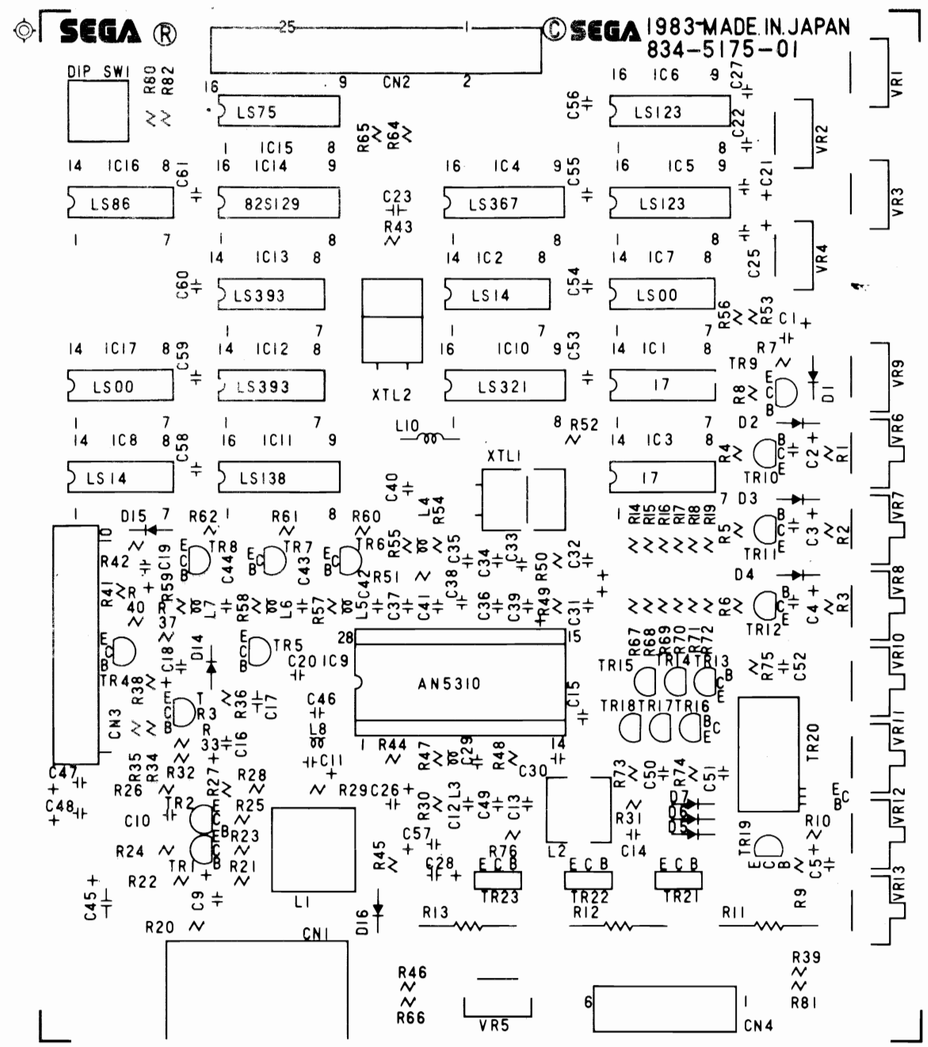

REVISIONS

PROJECT ENG:		USED ON ASTRON BELT	Bally / MIDWAY MFG. CO. FRANKLIN PK.- ILL.
DO NOT SCALE DWG.	HEAT TREAT	SCALE FULL	NO. REQ'D 1 PER
DIM. TOLERANCES UNLESS SPECIFIED CONCENTRICITY T.I.R. .003 FRACTIONAL ± 1/64 DECIMAL ± .005 HOLE DIA. +.002 -.000	DRN. JBB CKD. DATE 11/9/83	MAT'L. FINISH	DEMODULATOR P.C. ASSEMBLY DWG Q 834-05175-0000
			PART NO. M051 - 00A30 - A035

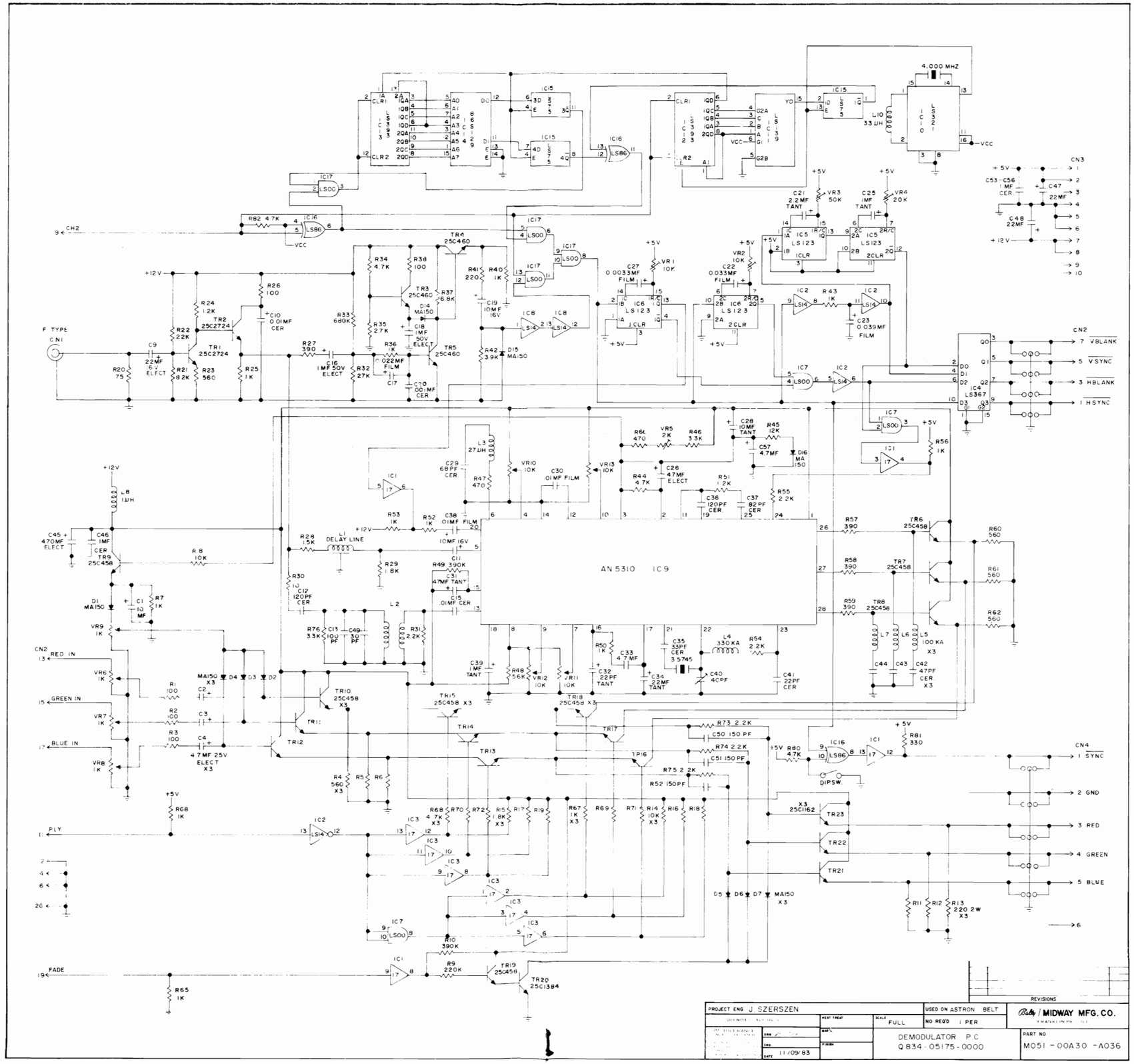
AN 5310 IC9
F TYPE CN1
CN2
CN3
CN4
VBLANK
VSYNC
HBLANK
HSYNC
SYNC
GND
RED
GREEN
BLUE
RED IN
GREEN IN
BLUE IN
FADE
DIPSW.
DELAY LINE
4.000 MHZ
DEMODULATOR P C
Q834-05175-0000
M051-00A30-A036
MIDWAY MFG. CO.
PROJECT ENG J SZERSZEN
USED ON ASTRON BELT
NO REQ'D 1 PER
SCALE FULL
11/09/83
REVISIONS

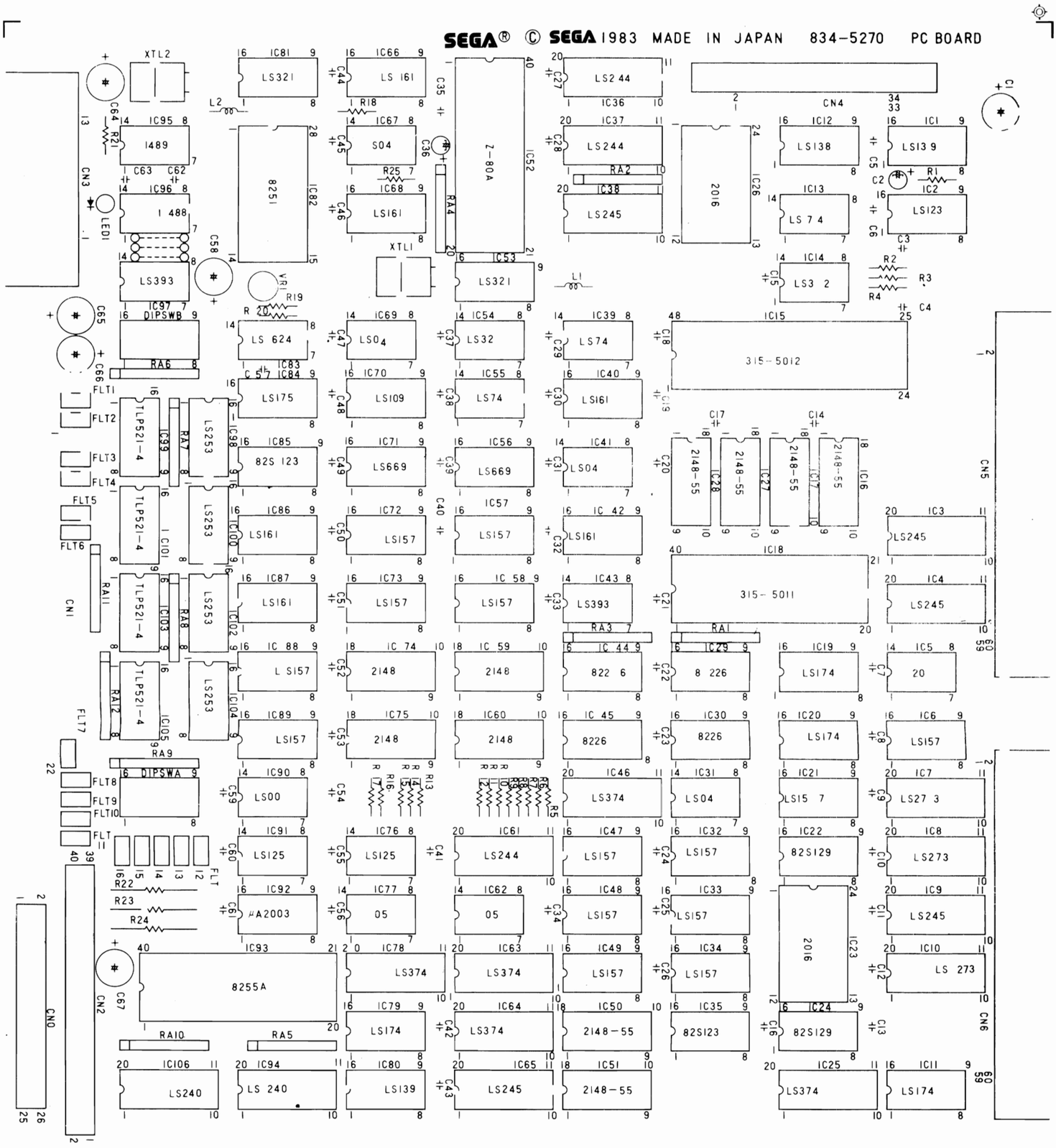

REVISIONS

PROJECT ENG:		USED ON ASTRON BELT	Bally / MIDWAY MFG. CO. FRANKLIN PK. ILL.
DO NOT SCALE DWG.	HEAT TREAT	SCALE FULL	NO. REQ'D 1 PER
DIM. TOLERANCES UNLESS SPECIFIED	DRN. TDB	MAT'L.	MAIN IC BOARD ASSY DWG Q834-05270-0000
CONCENTRICITY T.I.R. .003 FRACTIONAL ± 1/64 DECIMAL ± .005 HOLE DIA + .002 -.000	CKD.	FINISH	PART NO. M051 - 00A30 - A037
	DATE 11/9/83		

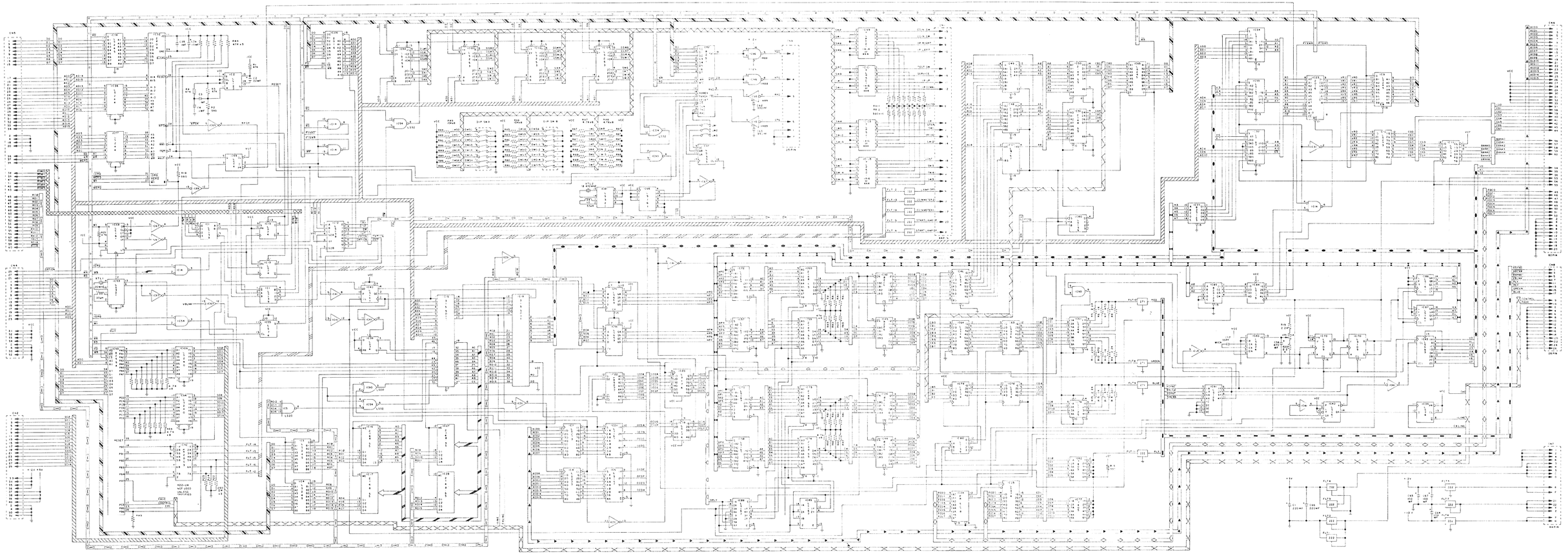

DRAWN BY		INTEGRATION BELT	MIDWAY MFG. CO.
		MS MOS - PGM	
		MAIN IC BD	PART NO
			MT5-00430 REV B

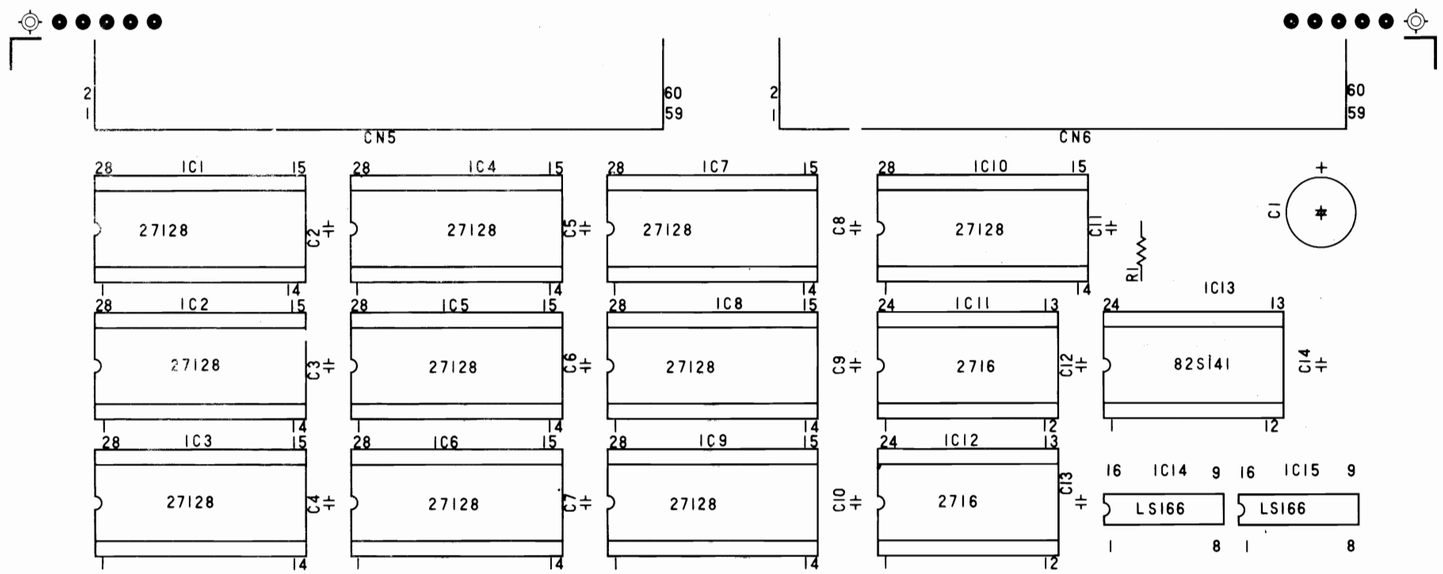

REVISIONS		

PROJECT ENG:			USED ON ASTRON BELT	Bally / MIDWAY MFG. CO. FRANKLIN PK. ILL.
DO NOT SCALE DWG.	HEAT TREAT	SCALE FULL	NO. REQ'D 1 PER	
DIM. TOLERANCES UNLESS SPECIFIED CONCENTRICITY T.I.R. .003 FRACTIONAL ± 1/64 DECIMAL ± .005 HOLE DIA + .002 -.000	DRN. TBB CKD. DATE 11/09/83	MAT'L. FINISH	EPROM P.C. ASSY DWG Q834-05271-0000	PART NO. M051 - 00A30 - A039

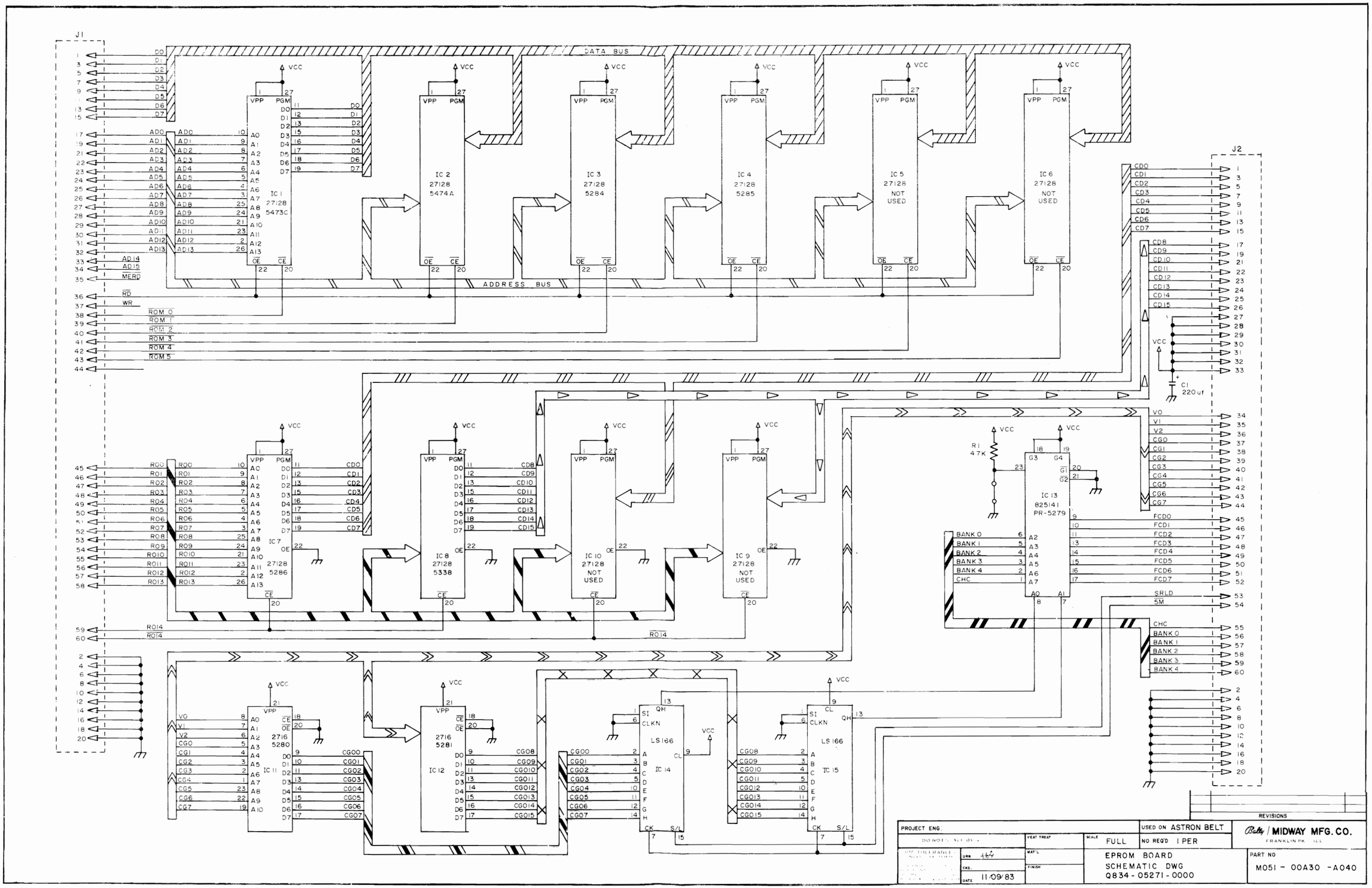
J1
J2
DATA BUS
ADDRESS BUS
IC 1 27128 5473C
IC 2 27128 5474A
IC 3 27128 5284
IC 4 27128 5285
IC 5 27128 NOT USED
IC 6 27128 NOT USED
IC 7 27128 5286
IC 8 27128 5338
IC 9 27128 NOT USED
IC 10 27128 NOT USED
IC 11 2716 5280
IC 12 2716 5281
IC 13 825141 PR-5279
IC 14 LS 166
IC 15 LS 166
R1 47K
C1 220uf
VCC
REVISIONS
PROJECT ENG:
USED ON ASTRON BELT
NO REQ'D 1 PER
SCALE FULL
FEAT TREAT
MAT'L
FINISH
DRW
CKD.
DATE 11/09/83
EPROM BOARD
SCHEMATIC DWG
Q834-05271-0000
Bally / MIDWAY MFG. CO.
FRANKLIN PK. ILL.
PART NO
M051 - 00A30 -A040

シルク図

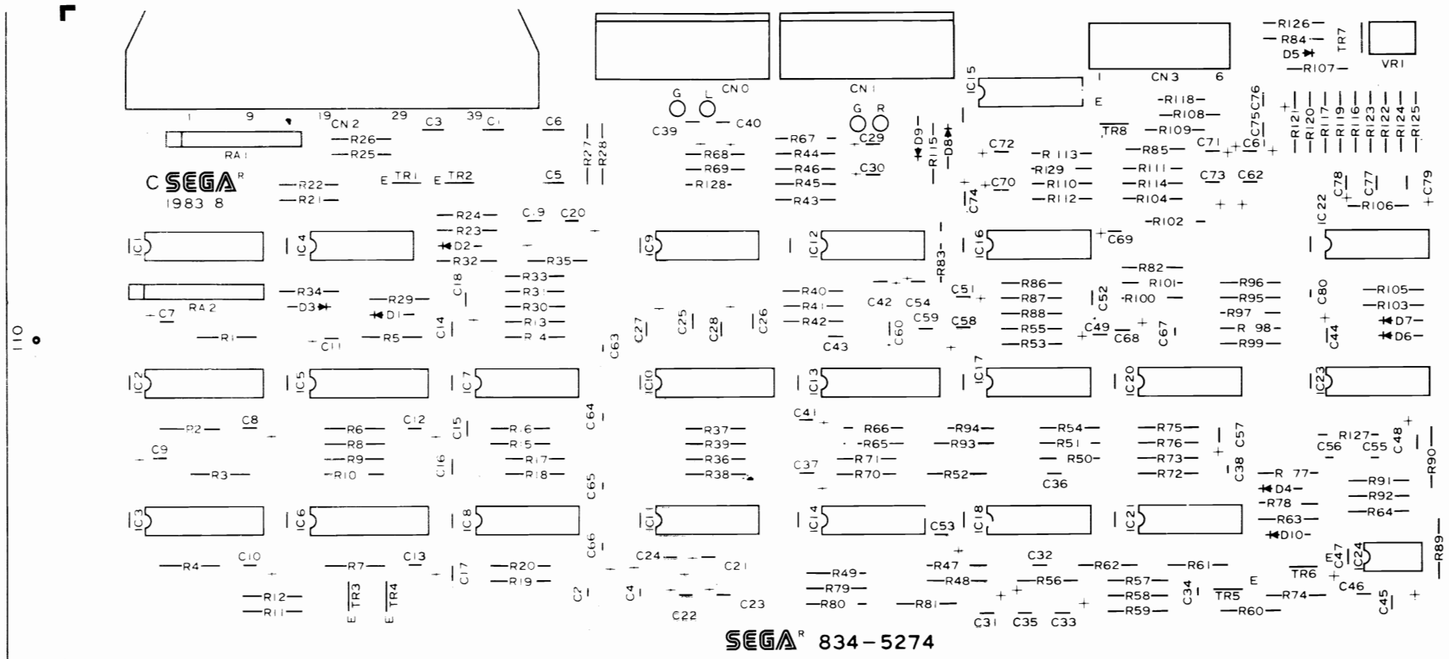

REVISIONS		

PROJECT ENG:			USED ON ASTRON BELT	Bally / MIDWAY MFG. CO. FRANKLIN PK. ILL.
DO NOT SCALE DWG.	HEAT TREAT	SCALE FULL	NO. REQ'D 1 PER	
DIM. TOLERANCES UNLESS SPECIFIED CONCENTRICITY T.I.R .003 FRACTIONAL ± 1/64 DECIMAL ± .005 HOLE DIA +.002 -.000	DRN. TBB CKD. DATE 11/09/83	MAT'L. FINISH	SOUND P.C. ASSY DWG Q834-05272-0000	PART NO. M051 - 00A30 - A041

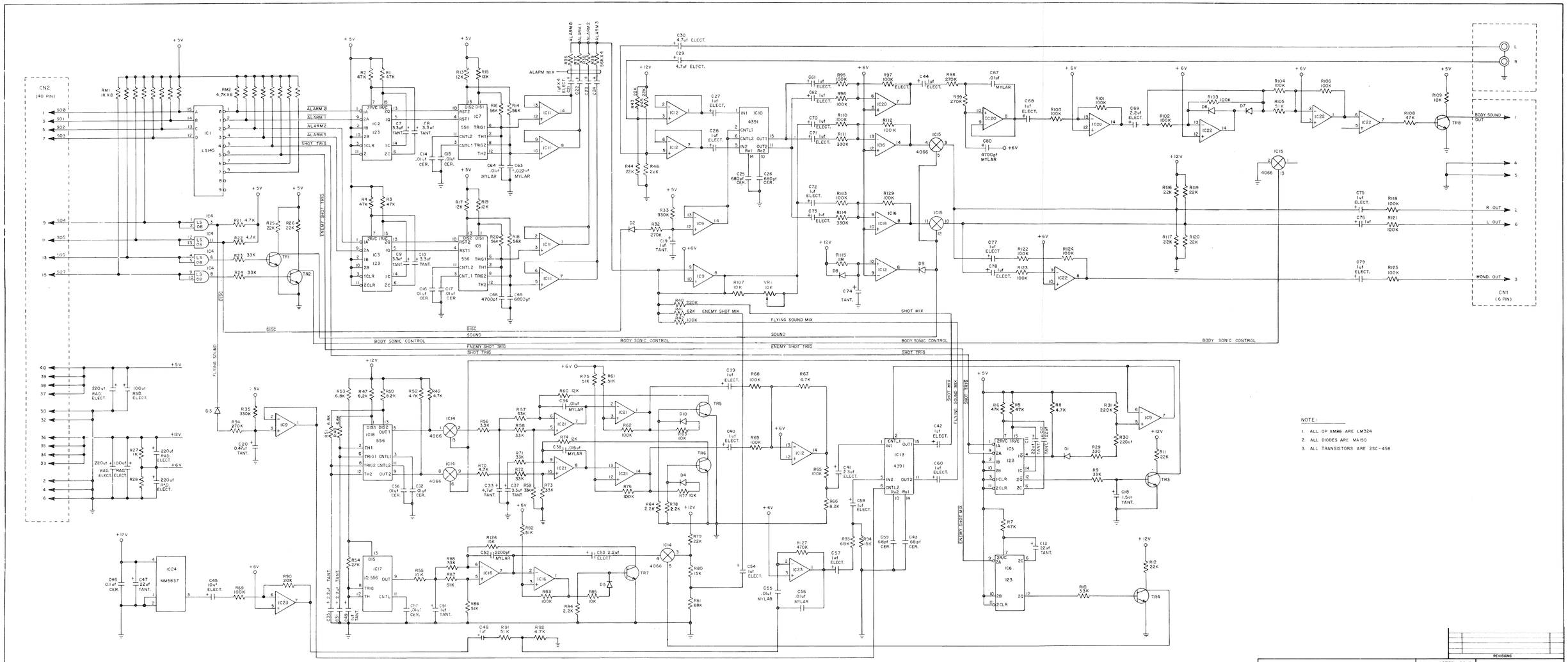
CN2 (40 PIN)
CN1 (6 PIN)
ALARM 0
ALARM 1
ALARM 2
ALARM 3
SHOT TRIG
ALARM MIX
ENEMY SHOT TRIG
DISC
FLYING SOUND
BODY SONIC CONTROL
SOUND
ENEMY SHOT MIX
FLYING SOUND MIX
SHOT MIX
BODY SOUND OUT
R OUT
L OUT
MOND. OUT
NOTE:
1. ALL OP AMPS ARE LM324
2. ALL DIODES ARE MA150
3. ALL TRANSISTORS ARE 2SC-458
REVISIONS
PROJECT ENG
USED ON ASTRON BELT
NO REQ'D 1 PER
MIDWAY MFG. CO.
SCHEMATIC DWG.
ASSEMBLY SOUND BD.
Q834 - 05272 - 0000
11-09-83
PART NO
M051 - 00A30 - A042

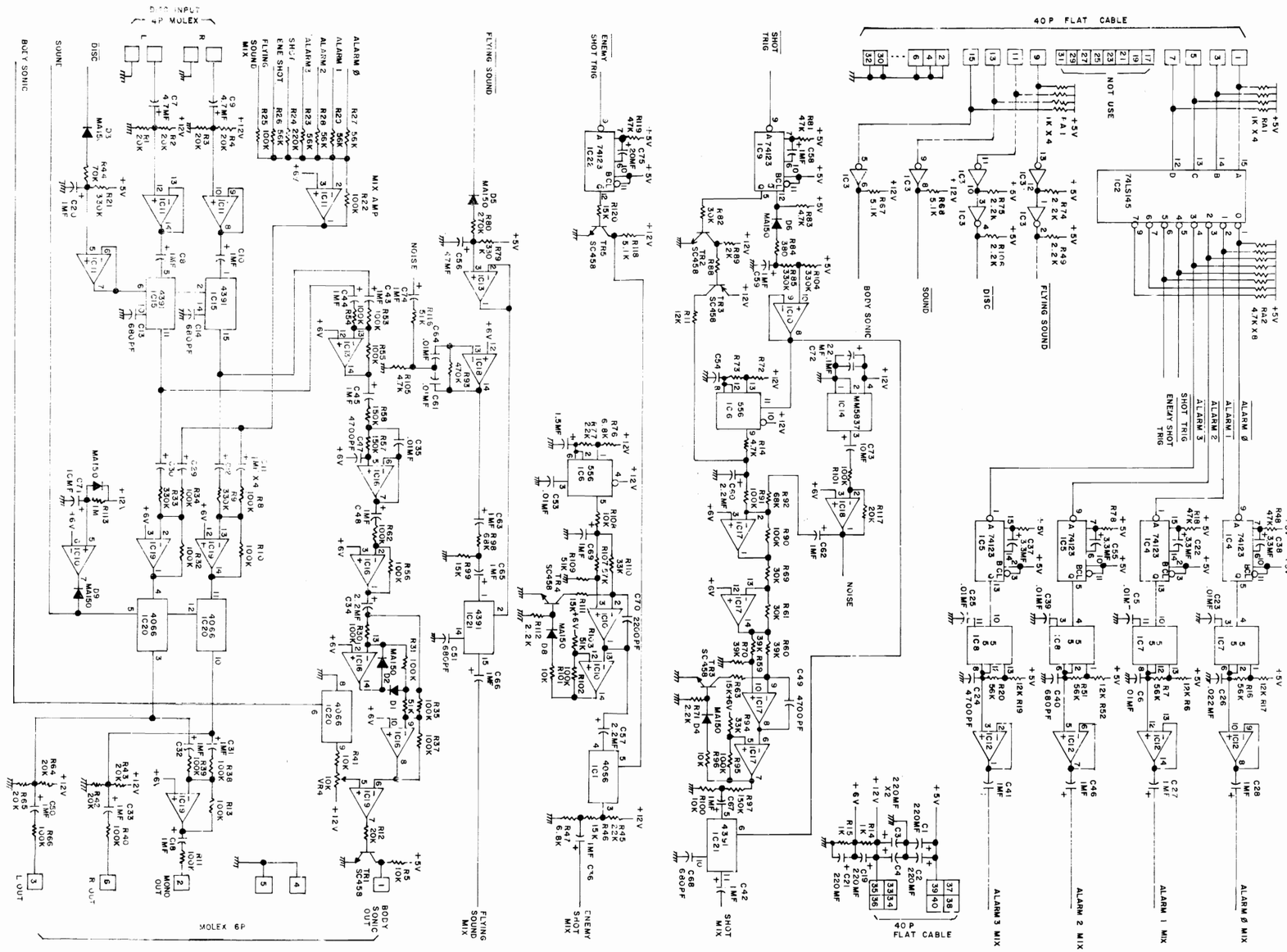

REVISIONS

834-5195
ASSY SOUND BOARD
ASTRON BELT

PROJECT ENG. J. SZERSZEN	HEAT TREAT	SCALE	USED ON ASTRON BELT
	MAT'L		NO. REQ'D 1 PER
DRN.	FINISH	SOUND BD (PIONEER) Q834-05195-0000	PART NO. M051-00A30 -A044
CKD.			
DATE 11/16/83			

Bally / MIDWAY MFG. CO.
FRANKLIN PK ILL

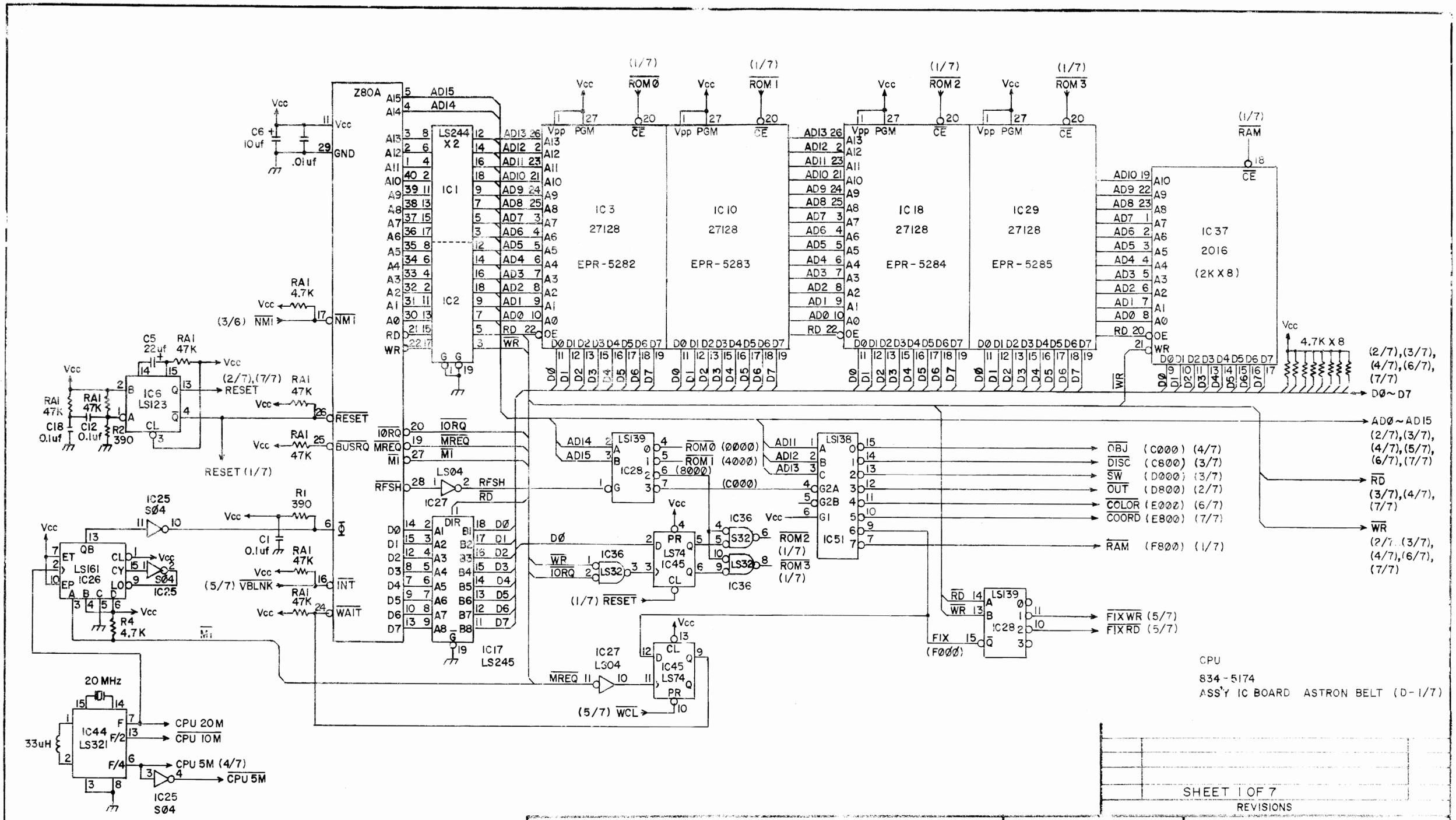

SHEET 1 OF 7

REVISIONS

PROJECT ENG: J. SZERSZEN			USED ON ASTRON BELT	Bally / MIDWAY MFG. CO. FRANKLIN PK. ILL.
DO NOT SCALE DWG.	HEAT TREAT	SCALE FULL	NO. REQ'D 1 PER	
DIM. TOLERANCES UNLESS OTHERWISE NOTED	DRN RLW	MAT'L	SCHEMATIC DWG. MAIN IC BD. (PIONEER) Q834-05174-0300	PART NO M051 - 00A30 - A046
	CKD	FINISH		
	DATE 11·21·83			

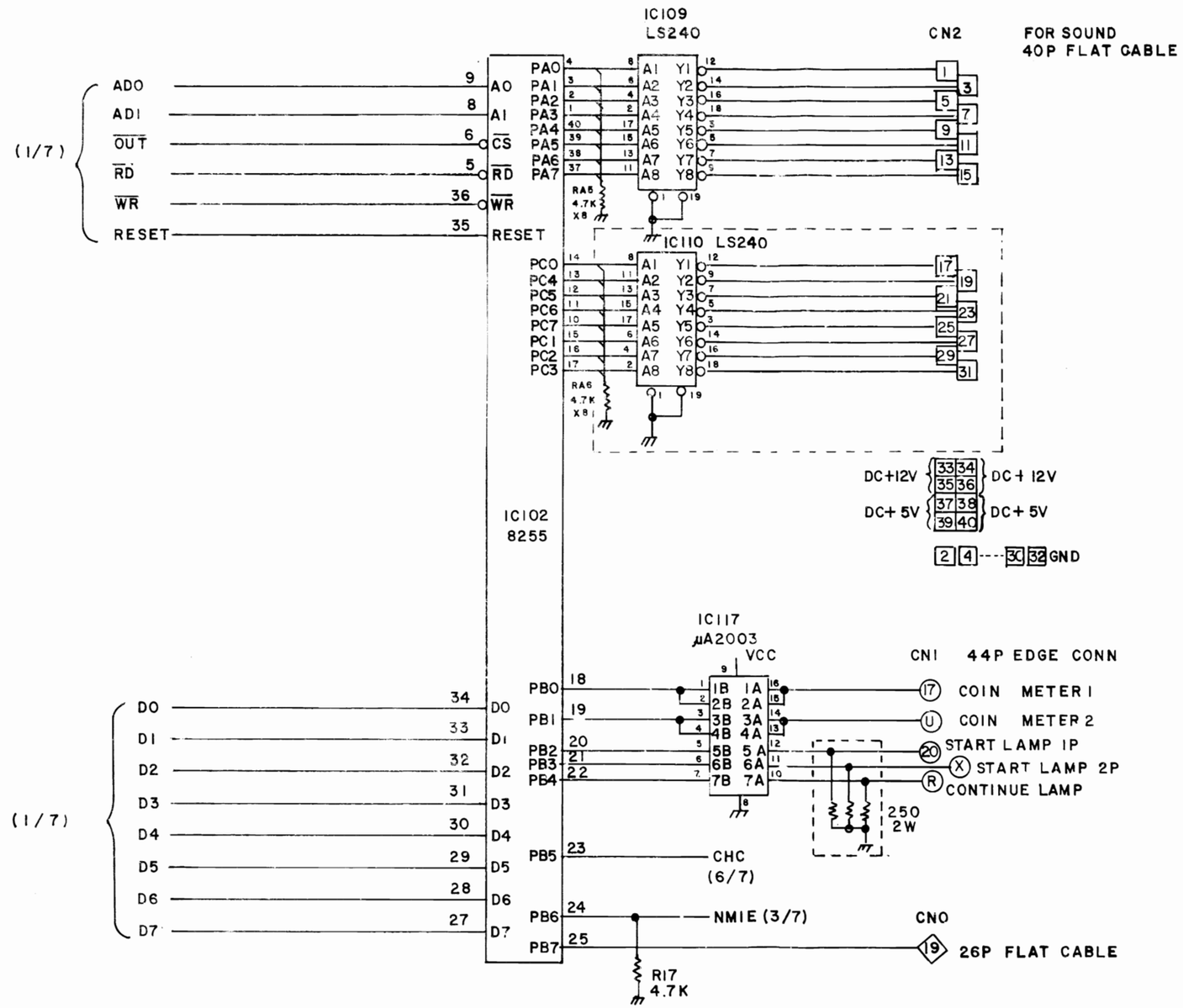

OUTPUT
834-5174
ASSY IC BOARD ASTRON BELT
(D-2/7)

SHEET 2 OF 7

REVISIONS

PROJECT ENG: J. SZERSZEN		USED ON ASTRON BELT	Bally / MIDWAY MFG. CO. FRANKLIN PK. ILL.
DO NOT SCALE DWG.	HEAT TREAT	SCALE FULL	NO. REQ'D 1 PER
DIM. TOLERANCES UNLESS SPECIFIED	DRN. BAK	MAT'L.	SCHEMATIC DWG. MAIN IC BD. (PIONEER) Q834-05174-0300	PART NO. M051 - 00A30 - A046
	CKD.	FINISH		
	DATE 11/16/83			

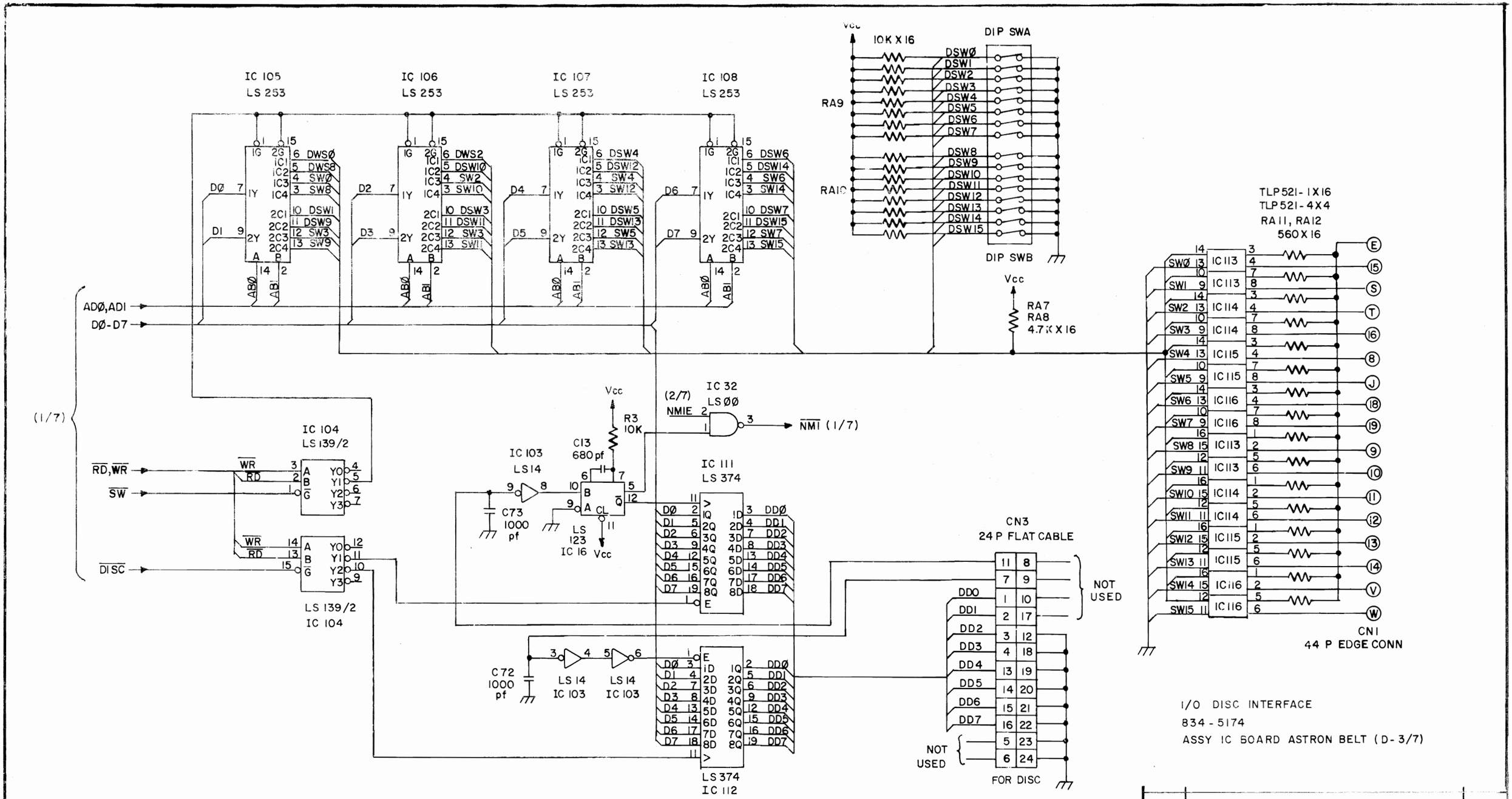

I/O DISC INTERFACE
834-5174
ASSY IC BOARD ASTRON BELT (D-3/7)

SHEET 3 OF 7

REVISIONS

PROJECT ENG: J. SZFPSZEN		USED ON ASTRON BELT	Bally / MIDWAY MFG. CO. FRANKLIN PK. ILL
DO NOT SCALE DWG.	HEAT TREAT	SCALE FULL	NO. REQ'D 1 PER
DRN. TBB	MAT'L	SCHEMATIC DWG MAIN IC BD. (PIONEER) QS34-05174-0300	PART NO. M051 - 00430 -A046
CKD.	FINISH		
DATE 11/17/83			

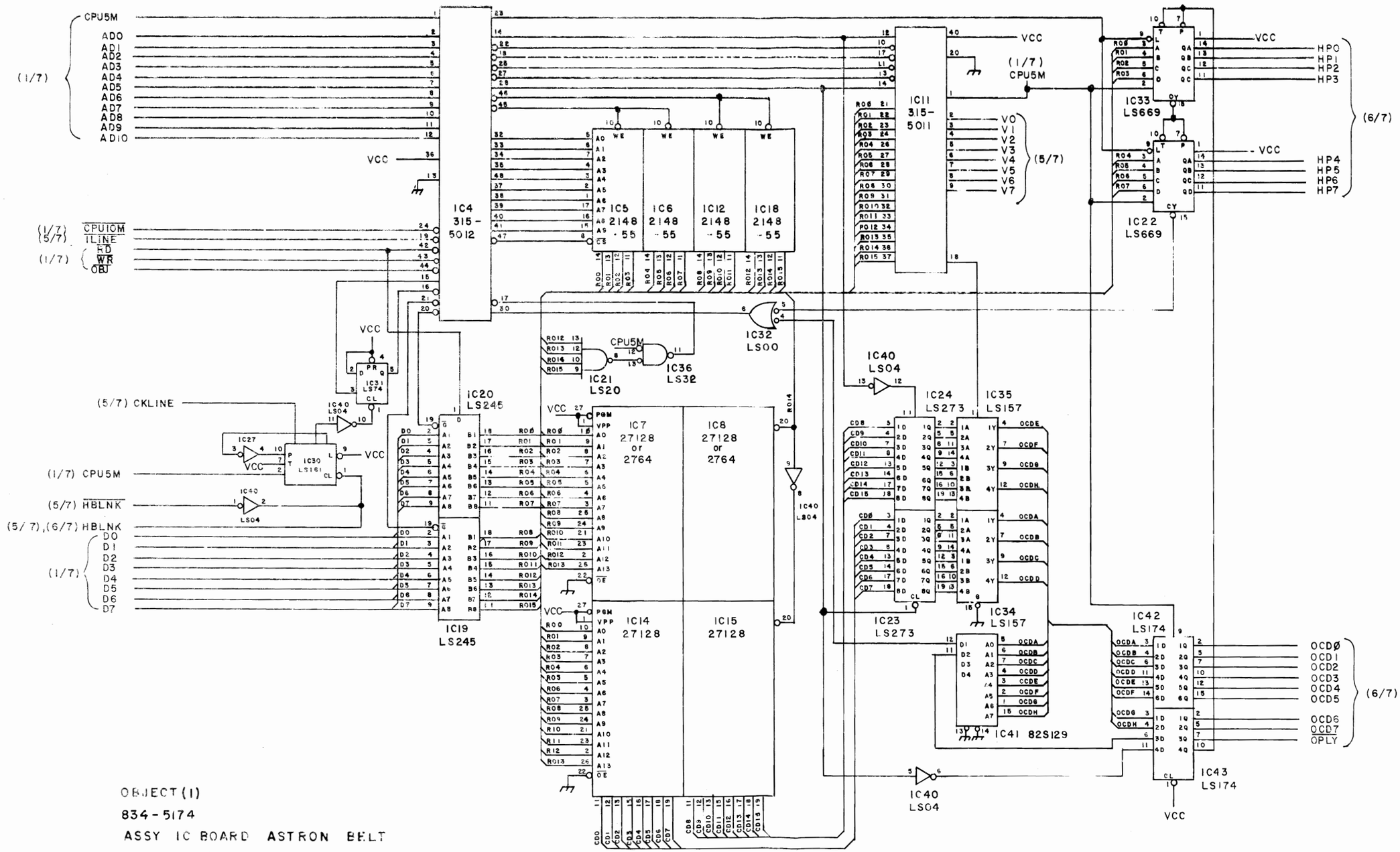

OBJECT (1)
834-5174
ASSY IC BOARD ASTRON BELT
(D-4/7)

SHEET 4 OF 7

PROJECT ENG.			USED ON ASTRON BELT	Bally / MIDWAY MFG. CO. FRANKLIN PK., ILL.
DO NOT SCALE DWG.		HEAT TREAT	SCALE FULL	NO. REQ'D 1 PER
DIM. TOLERANCES UNLESS SPECIFIED	DRN. BAK	MAT'L.	MAIN IC BD. (PIONEER)	PART NO. M051 - 00A30 - A046
	CKD.	FINISH		
	DATE 11/22/83		Q834-05174-0300	

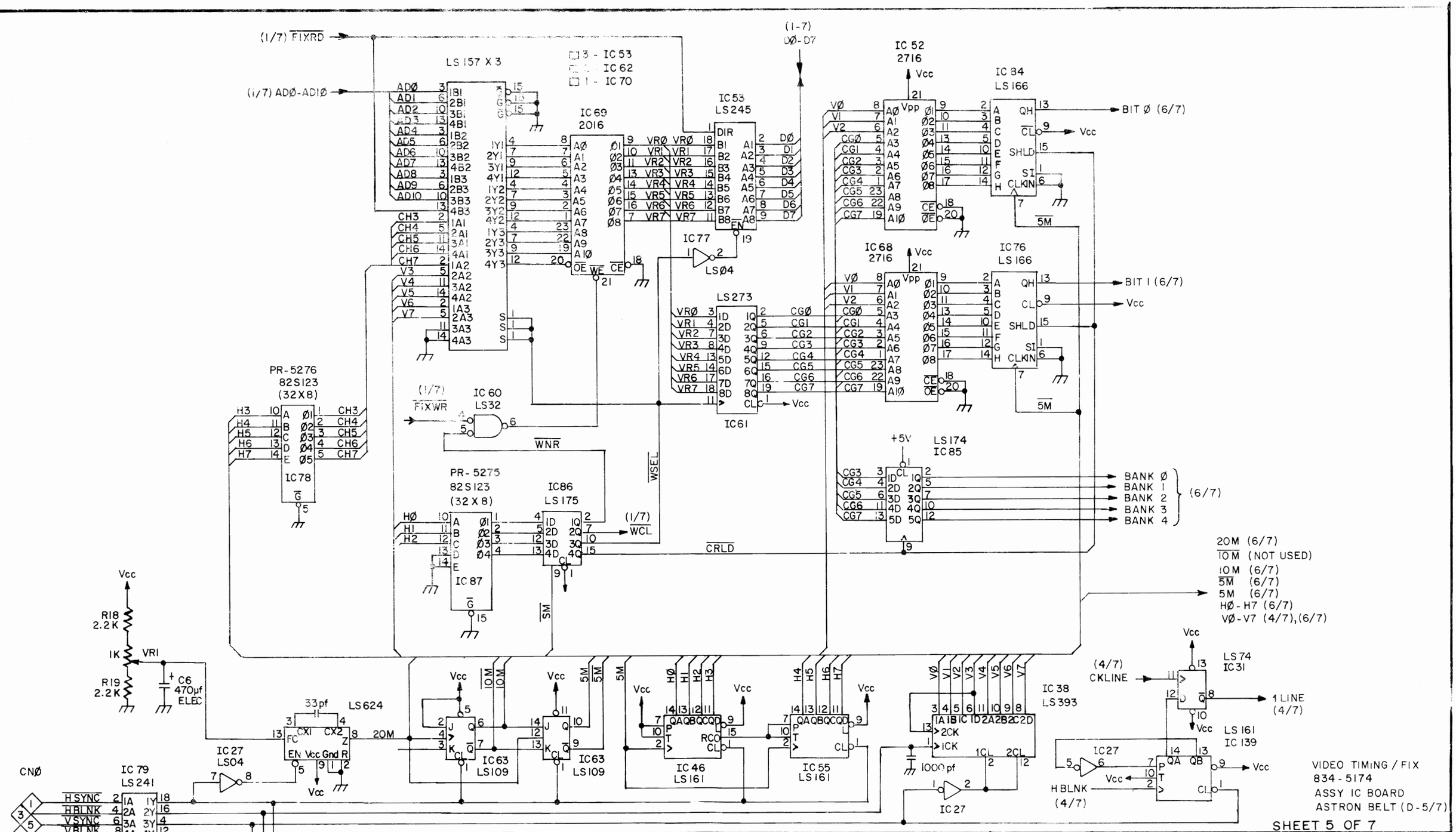

PROJECT ENG:		USED ON ASTRON BELT	Bally / MIDWAY MFG. CO. FRANKLIN PK. ILL.
DO NOT SCALE DWG.	HEAT TREAT	SCALE FULL	NO. REQ'D 1 PER
DIM. TOLERANCES UNLESS SPECIFIED	DRN. TBB	MAT'L.	SCHEMATIC DWG MAIN IC BD (PIONEER) Q834-05174-0300
CONCENTRICITY ± .00 FRACTIONAL ± 1/64 DECIMAL ± .005 HOLE DIA + .002 -.000	CKD.	FINISH	PART NO. M051 - 00A30 - A046
	DATE 11/22/83		

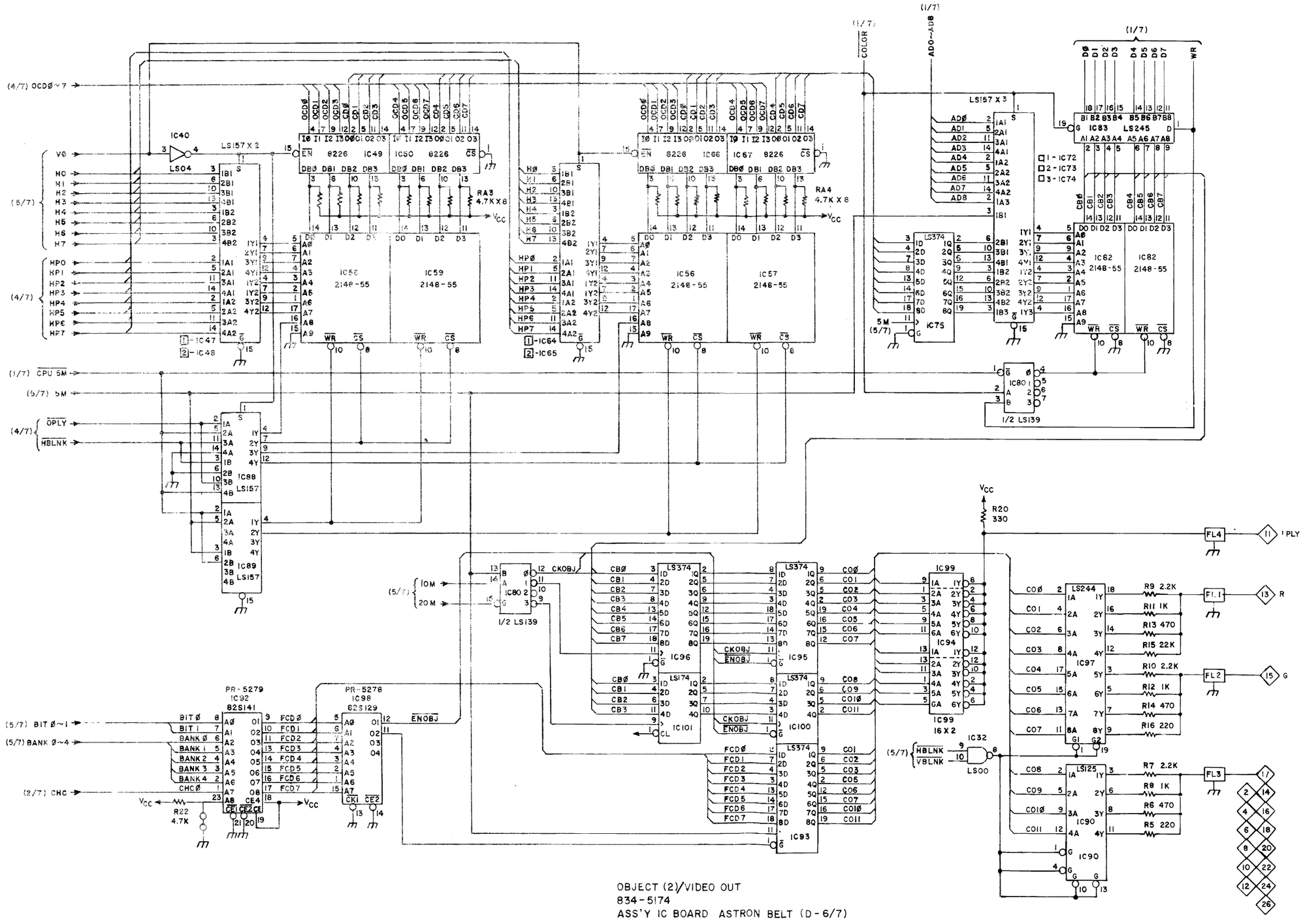

OBJECT (2)/VIDEO OUT
834-5174
ASS'Y IC BOARD ASTRON BELT (D-6/7)

SHEET 6 OF 7
REVISIONS

Bally / MIDWAY MFG. CO.
FRANKLIN PK. ILL.

PART NO. M051 - 00A30 - A046

USED ON ASTRON BELT
NO. REQ'D 1 PER

SCALE FULL

SCHEMATIC DWG.
MAIN IC BD. (PIONEER)
Q834-05174-0300

HEAT TREAT
MAT'L
FINISH

PROJECT ENG J. SZERSZEN
DRN KLW
CKD
DATE 11-21-83

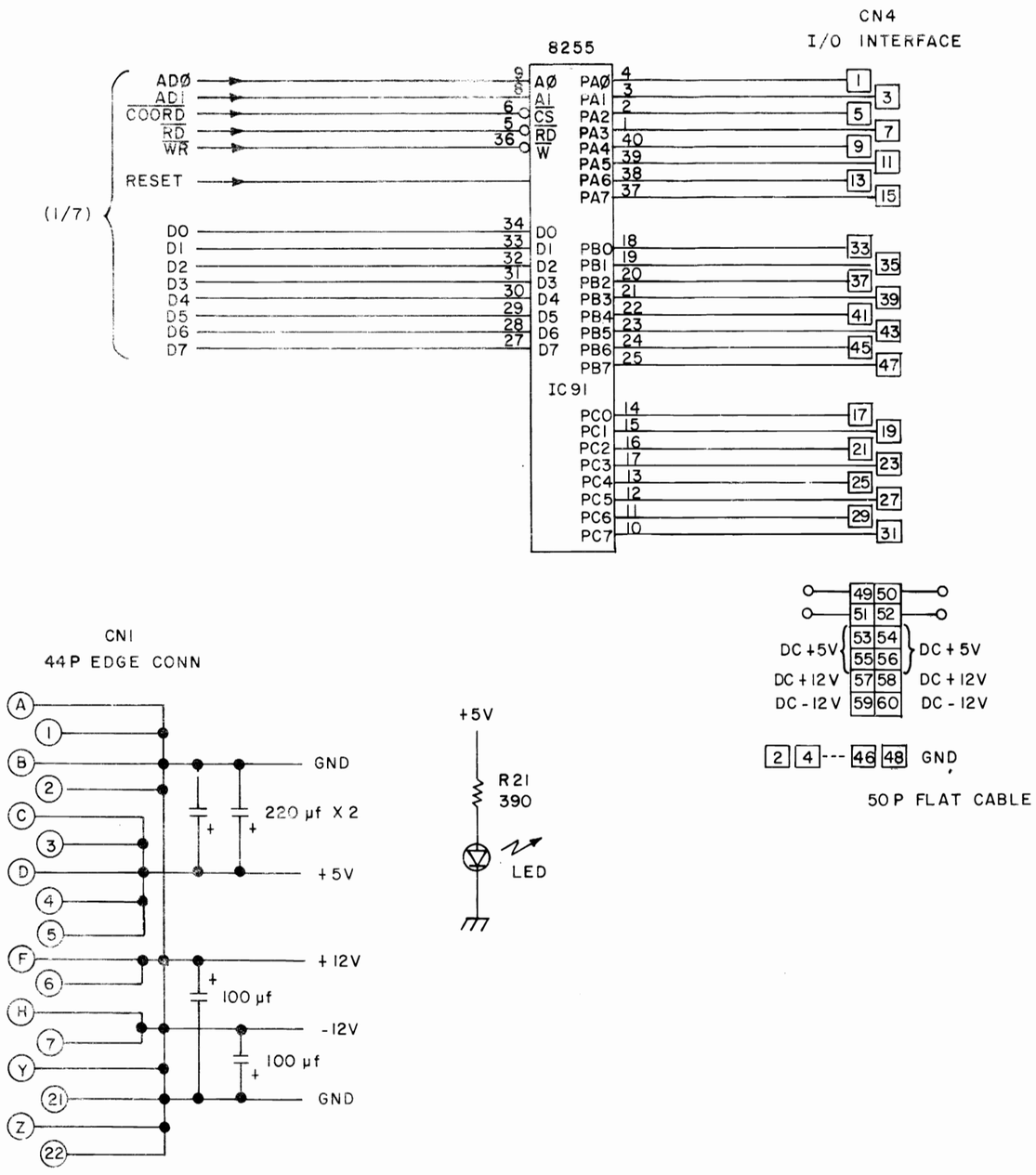

I/O INTERFACE
834-5174
ASSY IC BOARD ASTRON BELT (D-7/7)

SHEET 7 OF 7
REVISIONS

PROJECT ENG. J. SZERSZEN		USED ON ASTRON BELT	Bally / MIDWAY MFG. CO. FRANKLIN PK. IL
DESIGN CONTROL	HEAT TREAT	SCALE FULL	NO. REQ'D 1 PER
DRN. TBL	MATL.	SCHEMATIC DWG MAIN IC BD (PIONEER) Q834-05174-0300	PART NO M051 - 00A30 - A046
CKD.	FINISH		
DATE 11/16/83			

CONNECTION TO VIDEO DISC PLAYER

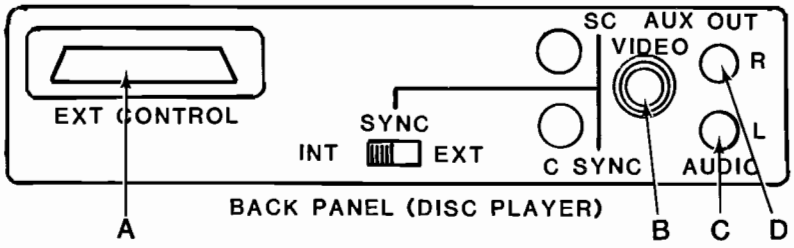

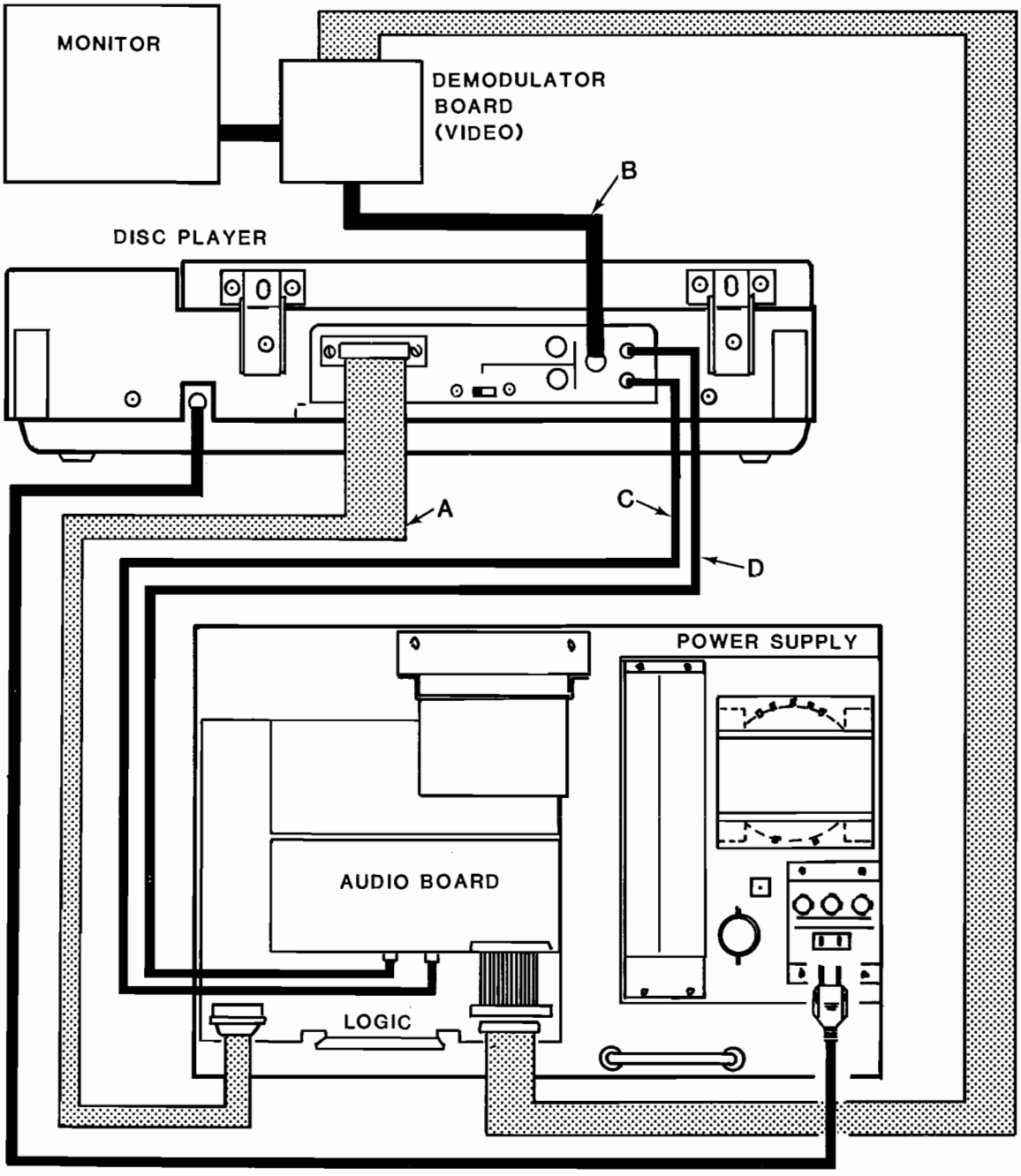

AMPLIFIER AND SPEAKERS (2) NOT SHOWN